TOSHIBA
Leading Innovation >>>

AIR CONDITIONER (MULTI TYPE)

Installation manual

HFC
R410A

Indoor Unit

For commercial use

Model name:

2-way Air Discharge Cassette Type

MMU-AP0072WH1
MMU-AP0092WH1
MMU-AP0122WH1
MMU-AP0152WH1
MMU-AP0182WH1
MMU-AP0242WH1
MMU-AP0272WH1
MMU-AP0302WH1
MMU-AP0362WH1
MMU-AP0482WH1
MMU-AP0562WH1

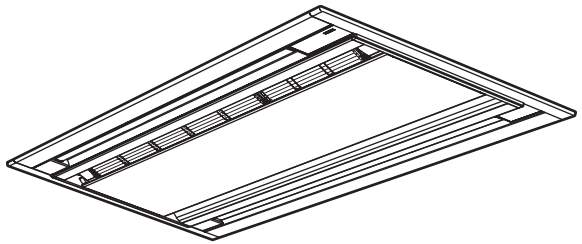

English EN

Original instruction

Please read this Installation Manual carefully before installing the Air Conditioner.
- This Manual describes the installation method of the indoor unit.
- For installation of the outdoor unit, follow the Installation Manual attached to the outdoor unit.

ADOPTION OF NEW REFRIGERANT

This Air Conditioner is a new type which adopts a new refrigerant HFC (R410A) instead of the conventional refrigerant R22 in order to prevent destruction of the ozone layer.

Contents

1 PRECAUTIONS FOR SAFETY 3
2 ACCESSORY PARTS 8
3 SELECTION OF INSTALLATION PLACE 9
4 INSTALLATION OF INDOOR UNIT 10
5 DRAIN PIPING WORK 16
6 REFRIGERANT PIPING 20
7 ELECTRICAL WORK 21
8 APPLICABLE CONTROLS 25
9 TEST RUN 27
10 MAINTENANCE 28
11 TROUBLE SHOOTING 29
12 SPECIFICATIONS 35

Thank you for purchasing this Toshiba air conditioner.
This Installation Manual describes the methods used to carry out the installation for the indoor unit.
For the installation of the outdoor unit, carry out the work by following the instructions in the Installation Manual provided with the outdoor unit.
This Installation Manual contains important information that complies with the “Machinery Directive” (Directive 2006/42/EC) so read through it carefully to ensure that you understand its contents.
After completing the installation work, hand over this Installation Manual as well as the Owner’s Manual provided with the outdoor unit to the user, and ask the user to keep them in a safe place for future reference.

Provide a dedicated power outlet, which is separate from the one used for the outdoor unit, for supplying the power to the indoor unit.
Also, the Y-shape branching joint or branch header sold separately is required for the piping connections between the indoor unit and outdoor unit.
Select these joints or headers according to the piping system capacity.

Generic Denomination: Air Conditioner

Definition of Qualified Installer or Qualified Service Person

The air conditioner must be installed, maintained, repaired and removed by a qualified installer or qualified service person. When any of these jobs is to be done, ask a qualified installer or qualified service person to do them for you. A qualified installer or qualified service person is an agent who has the qualifications and knowledge described in the table below.

Agent	Qualifications and knowledge which the agent must have
Qualified installer	• The qualified installer is a person who installs, maintains, relocates and removes the air conditioners made by Toshiba Carrier Corporation. He or she has been trained to install, maintain, relocate and remove the air conditioners made by Toshiba Carrier Corporation or, alternatively, he or she has been instructed in such operations by an individual or individuals who have been trained and is thus thoroughly acquainted with the knowledge related to these operations. • The qualified installer who is allowed to do the electrical work involved in installation, relocation and removal has the qualifications pertaining to this electrical work as stipulated by the local laws and regulations, and he or she is a person who has been trained in matters relating to electrical work on the air conditioners made by Toshiba Carrier Corporation or, alternatively, he or she has been instructed in such matters by an individual or individuals who have been trained and is thus thoroughly acquainted with the knowledge related to this work. • The qualified installer who is allowed to do the refrigerant handling and piping work involved in installation, relocation and removal has the qualifications pertaining to this refrigerant handling and piping work as stipulated by the local laws and regulations, and he or she is a person who has been trained in matters relating to refrigerant handling and piping work on the air conditioners made by Toshiba Carrier Corporation or, alternatively, he or she has been instructed in such matters by an individual or individuals who have been trained and is thus thoroughly acquainted with the knowledge related to this work. • The qualified installer who is allowed to work at heights has been trained in matters relating to working at heights with the air conditioners made by Toshiba Carrier Corporation or, alternatively, he or she has been instructed in such matters by an individual or individuals who have been trained and is thus thoroughly acquainted with the knowledge related to this work.

Agent	Qualifications and knowledge which the agent must have
Qualified service person	• The qualified service person is a person who installs, repairs, maintains, relocates and removes the air conditioners made by Toshiba Carrier Corporation. He or she has been trained to install, repair, maintain, relocate and remove the air conditioners made by Toshiba Carrier Corporation or, alternatively, he or she has been instructed in such operations by an individual or individuals who have been trained and is thus thoroughly acquainted with the knowledge related to these operations. • The qualified service person who is allowed to do the electrical work involved in installation, repair, relocation and removal has the qualifications pertaining to this electrical work as stipulated by the local laws and regulations, and he or she is a person who has been trained in matters relating to electrical work on the air conditioners made by Toshiba Carrier Corporation or, alternatively, he or she has been instructed in such matters by an individual or individuals who have been trained and is thus thoroughly acquainted with the knowledge related to this work. • The qualified service person who is allowed to do the refrigerant handling and piping work involved in installation, repair, relocation and removal has the qualifications pertaining to this refrigerant handling and piping work as stipulated by the local laws and regulations, and he or she is a person who has been trained in matters relating to refrigerant handling and piping work on the air conditioners made by Toshiba Carrier Corporation or, alternatively, he or she has been instructed in such matters by an individual or individuals who have been trained and is thus thoroughly acquainted with the knowledge related to this work. • The qualified service person who is allowed to work at heights has been trained in matters relating to working at heights with the air conditioners made by Toshiba Carrier Corporation or, alternatively, he or she has been instructed in such matters by an individual or individuals who have been trained and is thus thoroughly acquainted with the knowledge related to this work.

Definition of Protective Gear

When the air conditioner is to be transported, installed, maintained, repaired or removed, wear protective gloves and ‘safety’ work clothing.
In addition to such normal protective gear, wear the protective gear described below when undertaking the special work detailed in the table below.
Failure to wear the proper protective gear is dangerous because you will be more susceptible to injury, burns, electric shocks and other injuries.

Work undertaken	Protective gear worn
All types of work	Protective gloves ‘Safety’ working clothing
Electrical-related work	Gloves to provide protection for electricians and from heat Insulating shoes Clothing to provide protection from electric shock
Work done at heights (50 cm or more)	Helmets for use in industry
Transportation of heavy objects	Shoes with additional protective toe cap
Repair of outdoor unit	Gloves to provide protection for electricians and from heat

■ Warning Indications on the Air Conditioner Unit

Warning indication	Description
WARNING ELECTRICAL SHOCK HAZARD Disconnect all remote electric power supplies before servicing.	**WARNING** **ELECTRICAL SHOCK HAZARD** Disconnect all remote electric power supplies before servicing.
WARNING Moving parts. Do not operate unit with grille removed. Stop the unit before the servicing.	**WARNING** Moving parts. Do not operate unit with grille removed. Stop the unit before the servicing.
CAUTION High temperature parts. You might get burned when removing this panel.	**CAUTION** High temperature parts. You might get burned when removing this panel.
CAUTION Do not touch the aluminum fins of the unit. Doing so may result in injury.	**CAUTION** Do not touch the aluminium fins of the unit. Doing so may result in injury.
CAUTION BURST HAZARD Open the service valves before the operation, otherwise there might be the burst.	**CAUTION** **BURST HAZARD** Open the service valves before the operation, otherwise there might be the burst.

1 PRECAUTIONS FOR SAFETY

The manufacturer shall not assume any liability for the damage caused by not observing the description of this manual.

⚠ WARNING

General

- Before starting to install the air conditioner, read carefully through the Installation Manual, and follow its instructions to install the air conditioner.
- Only a qualified installer (*1) or qualified service person (*1) is allowed to install the air conditioner. If the air conditioner is installed by an unqualified individual, a fire, electric shocks, injury, water leakage, noise and/or vibration may result.
- Do not use any refrigerant different from the one specified for complement or replacement. Otherwise, abnormally high pressure may be generated in the refrigeration cycle, which may result in a failure or explosion of the product or an injury to your body.
- Before opening the intake grille of the indoor unit or service panel of the outdoor unit, set the circuit breaker to the OFF position. Failure to set the circuit breaker to the OFF position may result in electric shocks through contact with the interior parts. Only a qualified installer (*1) or qualified service person (*1) is allowed to remove the intake grille of the indoor unit or service panel of the outdoor unit and do the work required.

- Before carrying out the installation, maintenance, repair or removal work, be sure to set the circuit breaker to the OFF position. Otherwise, electric shocks may result.
- Place a “Work in progress” sign near the circuit breaker while the installation, maintenance, repair or removal work is being carried out. There is a danger of electric shocks if the circuit breaker is set to ON by mistake.
- Only a qualified installer (*1) or qualified service person (*1) is allowed to undertake work at heights using a stand of 50 cm or more or to remove the intake grille of the indoor unit to undertake work.
- Do not undertake inspections or servicing with all the hooks of the center panel disengaged and with only one or two wires still attached to the center panel. Doing so may cause the center panel to fall down, possibly causing injury to any individuals below.
- Wear protective gloves and safety work clothing during installation, servicing and removal.
- Do not touch the aluminium fin of the outdoor unit. You may injure yourself if you do so. If the fin must be touched for some reason, first put on protective gloves and safety work clothing, and then proceed.
- Do not climb onto or place objects on top of the outdoor unit. You may fall or the objects may fall off of the outdoor unit and result in injury.
- When working at heights, use a ladder which complies with the ISO 14122 standard, and follow the procedure in the ladder’s instructions. Also wear a helmet for use in industry as protective gear to undertake the work.
- When cleaning the filter or other parts, set the circuit breaker to OFF without fail, and place a “Work in progress” sign near the circuit breaker before proceeding with the work.
- When working at heights, put a sign in place so that no-one will approach the work location, before proceeding with the work. Parts and other objects may fall from above, possibly injuring a person below. Furthermore, while carrying out the work, wear a helmet for protection from falling objects.
- The refrigerant used by this air conditioner is the R410A.
- You shall ensure that the air conditioner is transported in stable condition. In case an accident such as dropping of the unit occurs while transporting the air conditioner, contact the dealer.
- Do not move or repair any unit by yourself. There is high voltage inside the unit. You may get electric shock when removing the cover and main unit.
- This appliance is intended to be used by expert or trained users in shops, in light industry, or for commercial use by lay persons.

Selection of installation location

- If you install the unit in a small room, take appropriate measures to prevent the refrigerant from exceeding the limit concentration even if it leaks. Consult the dealer from whom you purchased the air conditioner when you implement the measures. Accumulation of highly concentrated refrigerant may cause an oxygen deficiency accident.
- Do not install the air conditioner in a location that may be subject to a risk of exposure to a combustible gas. If a combustible gas leaks and becomes concentrated around the unit, a fire may occur.

- When transporting the air conditioner, wear shoes with additional protective toe caps.
- When transporting the air conditioner, do not take hold of the bands around the packing carton. You may injure yourself if the bands should break.
- Install the indoor unit at least 2.5 m above the floor level since otherwise the users may injure themselves or receive electric shocks if they poke their fingers or other objects into the indoor unit while the air conditioner is running.
- Do not place any combustion appliance in a place where it is directly exposed to the wind of air conditioner, otherwise it may cause imperfect combustion.

Installation

- When the indoor unit is to be suspended, the designated hanging bolts (M10 or W3/8) and nuts (M10 or W3/8) must be used.
- Install the air conditioner at enough strong places to withstand the weight of the unit. If the strength is not enough, the unit may fall down resulting in injury.
- Follow the instructions in the Installation Manual to install the air conditioner. Failure to follow these instructions may cause the product to fall down or topple over or give rise to noise, vibration, water leakage, etc.
- The designated bolts (M10, M12) and nuts (M10, M12) for securing the outdoor unit must be used when installing the unit.
- Install the outdoor unit property in a location that is durable enough to support the weight of the outdoor unit. Insufficient durability may cause the outdoor unit to fall, which may result in injury.
- Carry out the specified installation work to guard against the possibility of high winds and earthquake.
  If the air conditioner is not installed appropriately, a unit may topple over or fall down, causing an accident.
- If refrigerant gas has leaked at any point during the installation work, ventilate the area.
  If leaked refrigerant gas should come into contact with flames or sparks, noxious gases may be generated.

Refrigerant piping

- Install the refrigerant pipe securely during the installation work before operating the air conditioner. If the compressor is operated with the valve open and without refrigerant pipe, the compressor sucks air and the refrigeration cycles is over pressurized, which may cause a injury.
- Tighten the flare nut with a torque wrench in the specified manner. Excessive tighten of the flare nut may cause a crack in the flare nut after a long period, which may result in refrigerant leakage.
- After the installation work, confirm that refrigerant gas does not leak. If refrigerant gas leaks into the room and flows near a fire source, such as a cooking range, noxious gas may be generated.
- When the air conditioner has been installed or relocated, follow the instructions in the Installation Manual and purge the air completely so that no gases other than the refrigerant will be mixed in the refrigerating cycle. Failure to purge the air completely may cause the air conditioner to malfunction.
- Nitrogen gas must be used for the airtight test.

- The charge hose must be connected in such a way that it is not slack.
- If refrigerant gas has leaked during the installation work, ventilate the room immediately. If the leaked refrigerant gas comes in contact with fire, noxious gas may be generated.

Electrical wiring

- Only a qualified installer (*1) or qualified service person (*1) is allowed to carry out the electrical work of the air conditioner. Under no circumstances must this work be done by an unqualified individual since failure to carry out the work properly may result in electric shocks and/or electrical leaks.
- When connecting the electrical wires, repairing the electrical parts or undertaking other electrical jobs, wear gloves to provide protection for electricians and from heat, insulating shoes and clothing to provide protection from electric shocks. Failure to wear this protective gear may result in electric shocks.
- Use wiring that meets the specifications in the Installation Manual and the stipulations in the local regulations and laws. Use of wiring which does not meet the specifications may give rise to electric shocks, electrical leakage, smoking and/or a fire.
- Be sure to connect earth wire. (Grounding work)
  Incomplete earthing causes an electric shock.
- Do not connect earth wires to gas pipes, water pipes, and lightning rods or earth wires for telephone wires.
- After completing the repair or relocation work, check that the earth wires are connected properly.
- Install a circuit breaker that meets the specifications in the Installation Manual and the stipulations in the local regulations and laws.
- Install the circuit breaker where it can be easily accessed by the agent.
- When installing the circuit breaker outdoors, install one which is designed to be used outdoors.
- Under no circumstances must the power cable be extended. Connection trouble in the places where the cable is extended may give rise to smoking and/or a fire.
- Electrical wiring work shall be conducted according to law and regulation in the community and the Installation Manual. Failure to do so may result in electrocution or short circuit.

Test run

- Before operating the air conditioner after having completed the work, check that the electrical parts box cover of the indoor unit and service panel of the outdoor unit are closed, and set the circuit breaker to the ON position. You may receive an electric shock if the power is turned on without first conducting these checks.
- When you have noticed that some kind of trouble (such as when an error display has appeared, there is a smell of burning, abnormal sounds are heard, the air conditioner fails to cool or heat or water is leaking) has occurred in the air conditioner, do not touch the air conditioner yourself but set the circuit breaker to the OFF position, and contact a qualified service person. Take steps to ensure that the power will not be turned on (by marking “out of service” near the circuit breaker, for instance) until qualified service person arrives. Continuing to use the air conditioner in the trouble status may cause mechanical problems to escalate or result in electric shocks, etc.

- After the work has finished, be sure to use an insulation tester set (500V Megger) to check the resistance is 1 MΩ or more between the charge section and the non-charge metal section (Earth section). If the resistance value is low, a disaster such as a leak or electric shock is caused at user's side.
- Upon completion of the installation work, check for refrigerant leaks and check the insulation resistance and water drainage. Then conduct a test run to check that the air conditioner is operating properly.

Explanations given to user

- Upon completion of the installation work, tell the user where the circuit breaker is located. If the user does not know where the circuit breaker is, he or she will not be able to turn it off in the event that trouble has occurred in the air conditioner.
- If you have discovered that the fan grille is damaged, do not approach the outdoor unit but set the circuit breaker to the OFF position, and contact a qualified service person (*1) to have the repairs done. Do not set the circuit breaker to the ON position until the repairs are completed.
- After the installation work, follow the Owner's Manual to explain to the customer how to use and maintain the unit.

Relocation

- Only a qualified installer (*1) or qualified service person (*1) is allowed to relocate the air conditioner. It is dangerous for the air conditioner to be relocated by an unqualified individual since a fire, electric shocks, injury, water leakage, noise and/or vibration may result.
- When carrying out the pump-down work shut down the compressor before disconnecting the refrigerant pipe. Disconnecting the refrigerant pipe with the service valve left open and the compressor still operating will cause air, etc. to be sucked in, raising the pressure inside the refrigeration cycle to an abnormally high level, and possibly resulting in rupture, injury or other trouble.

⚠ CAUTION

New Refrigerant Air Conditioner Installation

- **THIS AIR CONDITIONER ADOPTS THE NEW HFC REFRIGERANT (R410A) WHICH DOES NOT DESTROY OZONE LAYER.**
- The characteristics of R410A refrigerant are; easy to absorb water, oxidizing membrane or oil, and its pressure is approx. 1.6 times higher than that of refrigerant R22. Accompanied with the new refrigerant, refrigerating oil has also been changed. Therefore, during installation work, be sure that water, dust, former refrigerant, or refrigerating oil does not enter the refrigerating cycle.
- To prevent charging an incorrect refrigerant and refrigerating oil, the sizes of connecting sections of charging port of the main unit and installation tools are changed from those for the conventional refrigerant.
- Accordingly the exclusive tools are required for the new refrigerant (R410A).
- For connecting pipes, use new and clean piping designed for R410A, and please care so that water or dust does not enter.

(*1) Refer to the “Definition of Qualified Installer or Qualified Service Person.”

2 ACCESSORY PARTS

■ Accessory parts

Part name	Quantity	Shape	Usage
Installation Manual	1	This manual	Be sure to hand over to customers.
CD-ROM (Installation Manual)	1	—	(For other languages that do not appear in this Installation Manual, please refer to the enclosed CD-ROM.)
Installation pattern	1	—	For confirmation of ceiling opening and indoor unit position
Installation gauge	1		For positioning of ceiling position (Incorporated with the installation pattern)
Pattern fastening screw	4		For attaching the pattern (M5 × ℓ16)
Banding band	4		For anchoring the insulated pipes
Heat insulating pipe	2		For heat insulation of pipe connecting section
Washer	8		For hanging-down unit (M10 × Ø34)
Hose band	1		For connecting drain pipe
Flexible hose	1		For adjusting center of drain pipe
Heat insulator	1		For heat insulation of drain connecting section
Heat insulator	1		For sealing of wire connecting port (with slit)

■ Separate sold parts

- The Ceiling panel and remote controller are sold separately. For the installation of these products, follow the Installation Manuals supplied with them.
- The wireless type remote controller is designed to be installed by attaching a wireless remote controller kit (sold separately) to the standard panel. (The wireless remote controller kit consists of a wireless remote controller and adjust corner caps with a receiver section.)

3 SELECTION OF INSTALLATION PLACE

Select a location for the indoor unit where the cool or warm air will circulate evenly.
Avoid installation in the following kinds of locations.

- Locations with acidic or alkaline atmospheres (such as areas with hot springs, factories where chemicals or pharmaceuticals are made and places where the exhaust air from combustion appliances will be sucked into the unit).
  Doing so may cause the heat exchanger (its aluminum fins and copper pipes) and other parts to become corroded.
- Places where iron or other metal dust is present. If iron or other metal dust adheres to or collects on the interior of the air conditioner, it may spontaneously combust and start a fire.
- Locations with atmospheres with mist of cutting oil or other types of machine oil.
  Doing so may cause the heat exchanger to become corroded, mists caused by the blockage of the heat exchanger to be generated, the plastic parts to be damaged, the heat insulators to peel off, and other such problems to result.
- Locations where vapors from food oils are formed (such as kitchens where food oils are used).
  Blocked filters may cause the air conditioner's performance to deteriorate, condensation to form, the plastic parts to be damaged, and other such problems to result.
- Locations near obstructions such as ventilation openings or lighting fixtures where the flow of the blown air will be disrupted (a disruption of the air flow may cause the air conditioner's performance to deteriorate or the unit to shut down).
- Locations where an in-house power generator is used for the power supply.
  The power line frequency and voltage may fluctuate, and the air conditioner may not work properly as a result.
- On truck cranes, ships or other moving conveyances.
- The air conditioner must not be used for special applications (such as for storing food, plants, precision instruments or art works).
  (The quality of the items stored may be degraded.)
- Locations where high frequencies are generated (by inverter equipment, in-house power generators, medical equipment or communication equipment).
  (Malfunctioning or control trouble in the air conditioner or noise may adversely affect the equipment's operation.)
- Locations where there is anything under the unit installed that would be compromised by wetness.
  (If the drain has become blocked or when the humidity is over 80%, condensation from the indoor unit will drip, possibly causing damage to anything underneath.)
- In the case of the wireless type of system, rooms with the inverter type of fluorescent lighting or locations exposed to direct sunlight.
  (The signals from the wireless remote controller may not be sensed.)
- Locations where organic solvents are being used.
- The air conditioner cannot be used for liquefied carbonic acid cooling or in chemical plants.
- Location near doors or windows where the air conditioner may come into contact with high-temperature, high-humidity outdoor air.
  (Condensation may occur as a result.)
- Locations where special sprays are used frequently.

Ensure that the electrical insulation between the metal parts of structures and metal parts of the air conditioner complies with the laws and regulations enforced in the country where the air conditioner is installed.

⚠ CAUTION

When the air conditioner is installed in the following kinds of locations where the ceiling temperature may be 30°C and the relative humidity may be over 80%, condensation may occur on the outer surfaces of the indoor unit and drip. Therefore, adhere some heat insulators to the side panels (on four sides) of the indoor unit and surface of the ceiling.

- Kitchens and other locations where high levels of indoor heat are generated
- Locations where the fresh air is supplied through the open space in the ceiling
- Inside ceiling under slate roofs or tiled roofs

Shapes of additional heat insulators (use insulators which are at least 10 mm thick)

Adhesion surfaces (MMU-)	Size (mm)			Q'ty	Remark
	AP007 to AP015	AP018 to AP030	AP036 to AP056		
Heat insulator for ceiling	815 × 570	1180 × 570	1600 × 570	1	–
Heat insulator for outlet side panel	815 × 230	1180 × 280	1600 × 280	2	–
Heat insulator for fresh-air inlet side panel	590 × 230	590 × 280	590 × 280	1	Clearance for the hanging fixtures must be provided.
Heat insulator for piping side panel	590 × 230	590 × 280	590 × 280	1	Clearance for the piping and hanging fixtures must be provided.

■ Installation space

Provide the space required for installing and servicing the indoor unit.
Provide a clearance of at least 5 mm between the top panel of the indoor unit and ceiling.

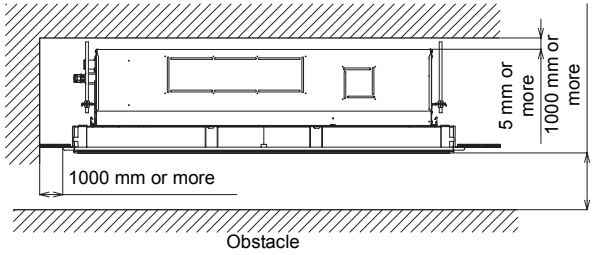

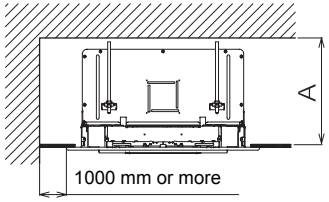

Installation space

Model: MMU-	Height: A
AP007 to AP015	300 mm or more
AP018 to AP056	350 mm or more

■ Ceiling height

It is hard for the warm air to reach the floor level if the ceiling height exceeds the standard dimension (set at the time of shipment) in the table below. Therefore, the high-ceiling setting must be selected.
For details on how to select this setting, refer to the section “Installing indoor unit on high ceiling” in APPLICABLE CONTROLS of this manual.

Height list of ceiling possible to be installed

(Unit: m)

Model: MMU-	AP007 to AP030	AP036 to AP056	SET DATA
Standard (At shipment)	2.7	2.7	0000
High ceiling (1)	3.2	3.0	0001
High ceiling (3)	3.8	3.5	0003

REQUIREMENT

- A high-ceiling installation can only be used for models AP007 to AP012 when the ratio of total connection capacity of the indoor unit to the outdoor unit capacity is 100% or less. Do not use this kind of installation if this capacity is over 100%.
- It is possible to change how long the filter sign (signaling that it is time to clean the filter) is to stay lighted on the remote controller in accordance with the installation conditions.
- It is also possible to raise the detection temperature for the heating if it is hard for the air conditioner to heat up the environment satisfactorily due to a factor such as the location where the indoor unit is installed or the structure of the room.
- For details on the setting, refer to the section “Change of lighting time of filter sign” and “To secure better effect of heating” in APPLICABLE CONTROLS of this manual.

■ In case of wireless type

Decide on the position where the remote controller is to be operated and where the unit is to be installed.
(The wireless type can sense signals within a range of approximately 8 meters. This distance serves as a general guideline. It may be slightly more or slightly less depending on the remaining charge of its batteries.)
- To prevent a malfunction, select a place where is not influenced by a fluorescent light or direct sunlight.
- Two or more (up to 6 units) indoor units with wireless type remote controller can be installed in the same room.

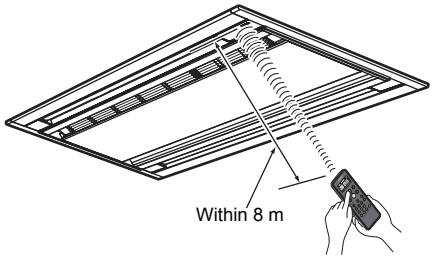

4 INSTALLATION OF INDOOR UNIT

⚠ CAUTION

Strictly comply with the following rules to prevent damage of the indoor units and human injury.
- Do not put a heavy article on the indoor unit. (Even units are packaged)
- Carry in the indoor unit as it is packaged if possible. If carrying in the indoor unit unpacked by necessity, be sure to use buffering cloth, etc. to not damage the unit.
- To move the indoor unit, hold the hooking metals (4 positions) only.
  Do not apply force to the other parts (refrigerant pipe, drain pan, foamed parts, or resin parts, etc.).
- Carry the package by two or more persons, and do not bundle it with plastic band at positions other than specified.

■ External view

AP007 to AP015 (Unit: mm)

Refrigerant pipe connecting port

Model: MMU-	Gas side: A
AP007 to AP012	Ø9.5
AP015	Ø12.7

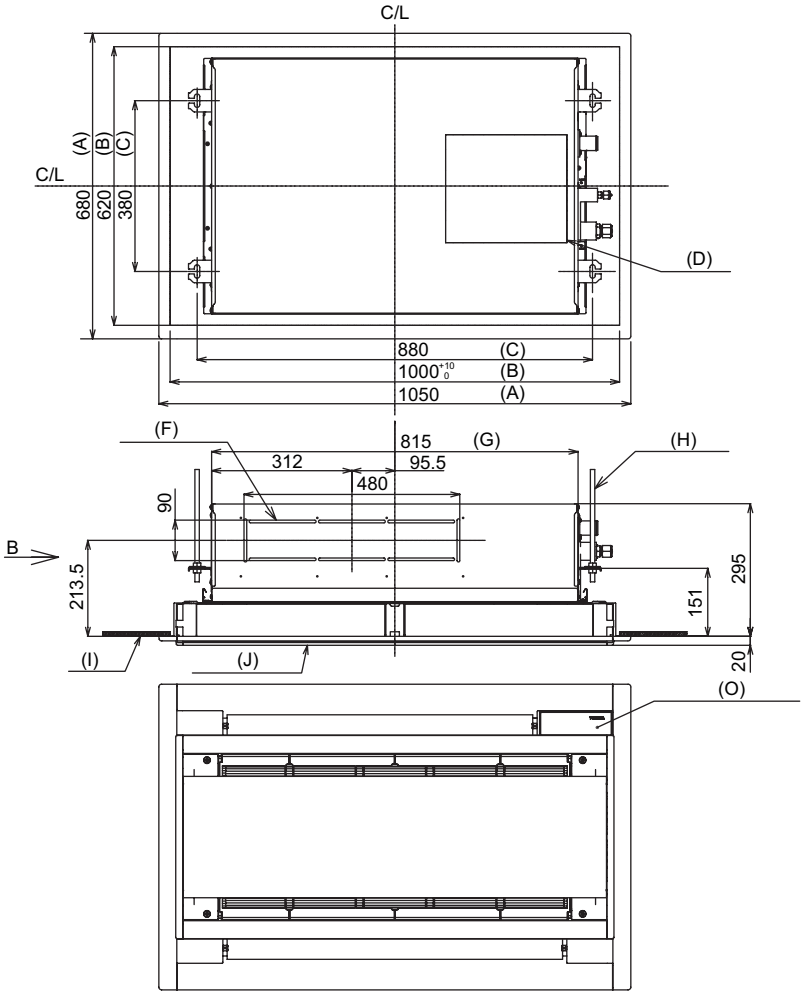

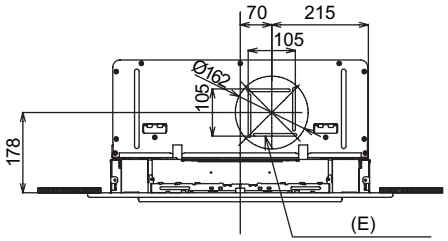

B view

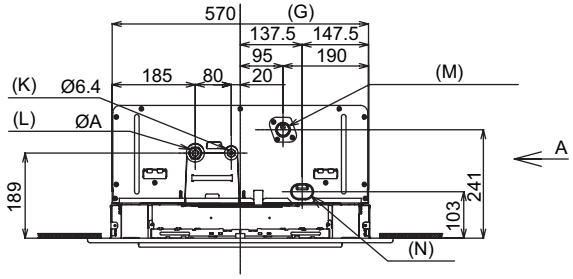

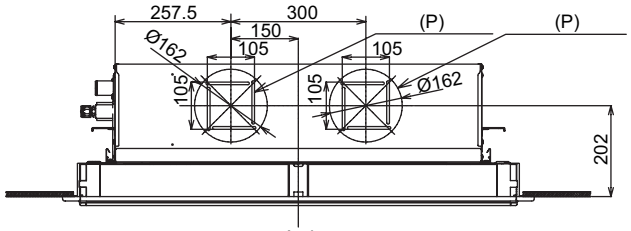

A view

(A)	Panel external dimension	(I)	Ceiling bottom surface
(B)	Ceiling opening dimension	(J)	Ceiling panel (Sold separately)
(C)	Hanging bolt pitch	(K)	Refrigerant pipe connecting port (Liquid)
(D)	Electric parts box	(L)	Refrigerant pipe connecting port (Gas)
(E)	Knockout square hole for auxiliary fresh air flange For Ø150 (Sold separately)	(M)	Drain pipe connecting port (Be absolutely sure to use the flexible hose provided for the connection here.)
(F)	Knockout hole	(N)	Take-in port of wires
(G)	Unit external dimension	(O)	Wireless signal sensor mounting area (Sold separately)
(H)	Hanging bolt M10 or W3/8 (Procured locally)	(P)	Knockout hole

AP018 to AP030 (Unit: mm)

Refrigerant pipe connecting port

Model: MMU-	Liquid side: A	Gas side: B
AP018	Ø6.4	Ø12.7
AP024 to AP030	Ø9.5	Ø15.9

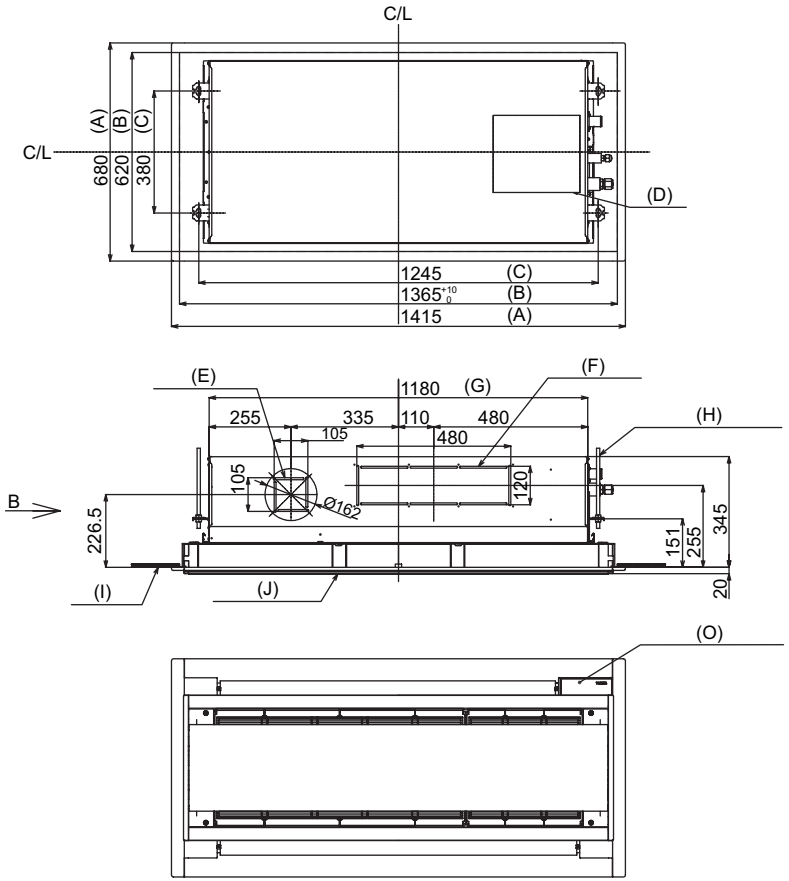

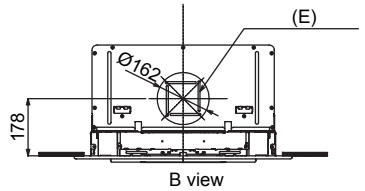

B view

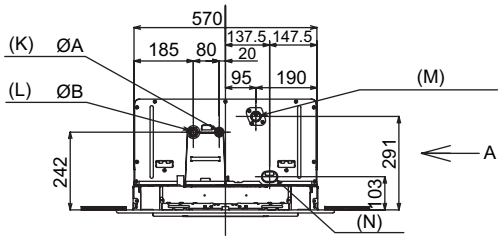

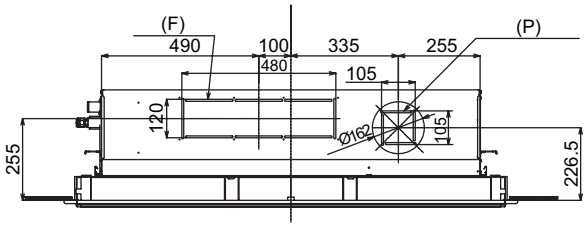

A view

(A)	Panel external dimension	(I)	Ceiling bottom surface
(B)	Ceiling opening dimension	(J)	Ceiling panel (Sold separately)
(C)	Hanging bolt pitch	(K)	Refrigerant pipe connecting port (Liquid)
(D)	Electric parts box	(L)	Refrigerant pipe connecting port (Gas)
(E)	Knockout square hole for auxiliary fresh air flange For Ø150 (Sold separately)	(M)	Drain pipe connecting port (Be absolutely sure to use the flexible hose provided for the connection here.)
(F)	Knockout hole	(N)	Take-in port of wires
(G)	Unit external dimension	(O)	Wireless signal sensor mounting area (Sold separately)
(H)	Hanging bolt M10 or W3/8 (Procured locally)	(P)	Knockout hole

AP036 to AP056 (Unit: mm)

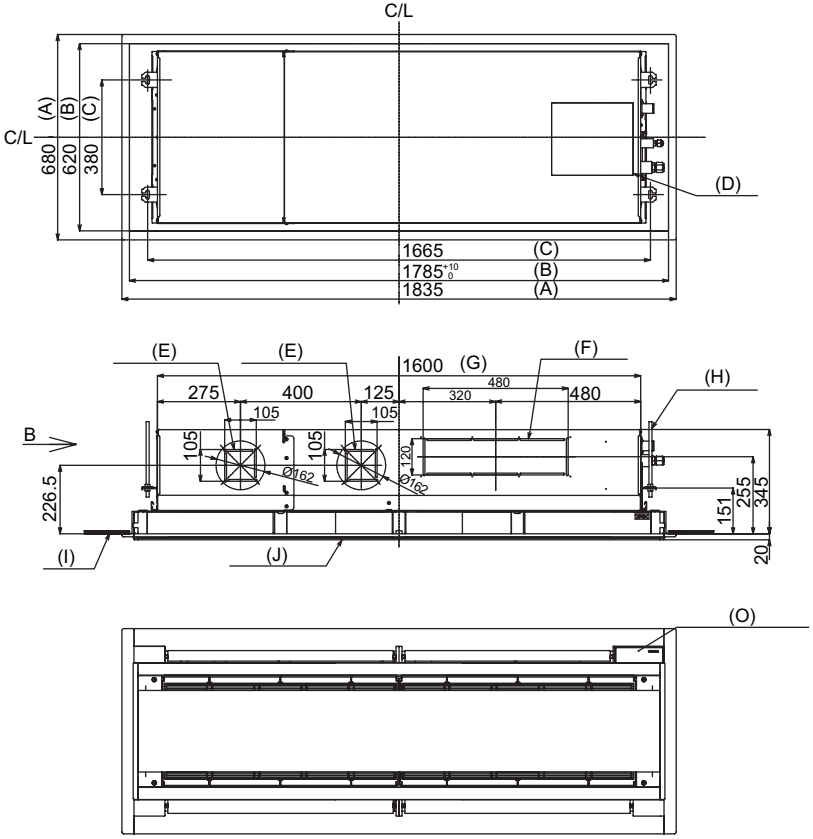

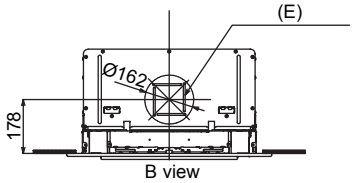

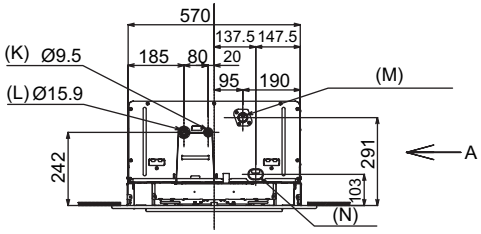

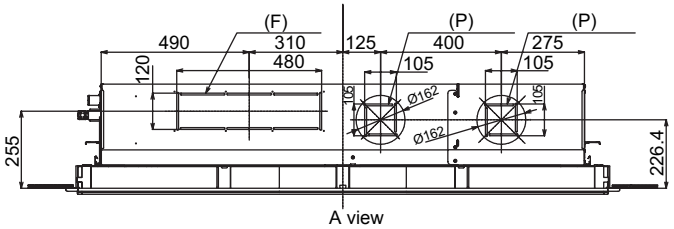

(A)	Panel external dimension	(I)	Ceiling bottom surface
(B)	Ceiling opening dimension	(J)	Ceiling panel (Sold separately)
(C)	Hanging bolt pitch	(K)	Refrigerant pipe connecting port (Liquid)
(D)	Electric parts box	(L)	Refrigerant pipe connecting port (Gas)
(E)	Knockout square hole for auxiliary fresh air flange For Ø150 (Sold separately)	(M)	Drain pipe connecting port (Be absolutely sure to use the flexible hose provided for the connection here.)
(F)	Knockout hole	(N)	Take-in port of wires
(G)	Unit external dimension	(O)	Wireless signal sensor mounting area (Sold separately)
(H)	Hanging bolt M10 or W3/8 (Procured locally)	(P)	Knockout hole

■ Opening a ceiling and installation of hanging bolts

- Decide on the installation position and orientation of the indoor unit while factoring in “SELECTION OF INSTALLATION PLACE” in this manual and the piping and wiring work to be performed after the indoor unit has been suspended from the ceiling.
- After the location of the indoor unit installation has been determined, open the ceiling and install hanging bolts.
- The dimensions of the ceiling opening and hanging bolt pitches are given in the outline drawing and the attached installation pattern.
- When a ceiling already exists, lay the drain pipe, refrigerant pipe, indoor unit/outdoor unit connection wires, and remote controller wires to their connection locations before hanging the indoor unit.

Procure hanging bolts and nuts for installing the indoor unit (these are not supplied).

Hanging bolt	M10 or W3/8	4 pieces
Nut	M10 or W3/8	12 pieces

How to use the installation pattern (accessory)

<For existing ceiling>
Use the installation pattern to position a ceiling opening and hanging bolts.

<For new ceiling>
Use the installation pattern to position the ceiling opening when hanging a ceiling.
- After the hanging bolts have been installed, install the indoor unit.
- Screw down the installation pattern on the ceiling panel mounting area of the indoor unit hanging fixtures. (Use the pattern fastening screws: M5 × ℓ16 (accessory).)
- When hanging a ceiling, open the ceiling along the outside dimensions of the installation pattern.

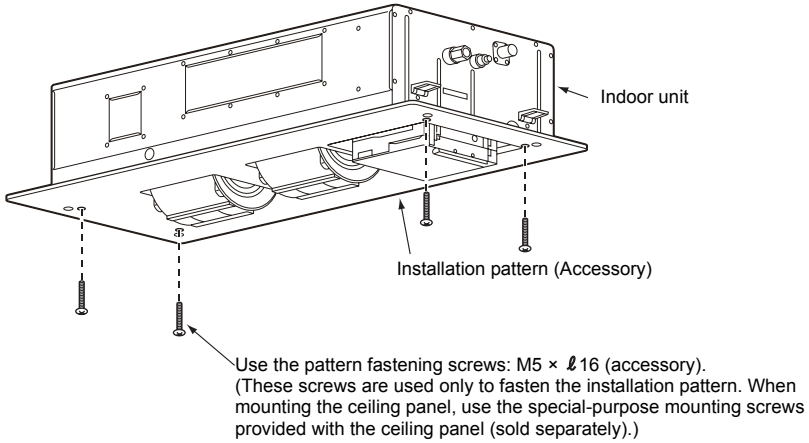

Treatment of ceiling

The ceiling differs according to structure of building. For details, consult your constructor or interior finish contractor. In the process after the ceiling board has been removed, it is important to reinforce ceiling foundation (frame) and to keep horizontal level of installed ceiling correctly in order to prevent vibration of ceiling board.
- Cut and remove the ceiling foundation.
- Reinforce the cut surface of ceiling foundation, and add ceiling foundation for fixing the end of ceiling board.

Installation of hanging bolt

Use M10 or W3/8 hanging bolts (4 pcs, procured locally). Matching to the existing structure, set pitch according to size in the unit external view as shown below.

New concrete slab

Install the bolts with insert brackets or anchor bolts.

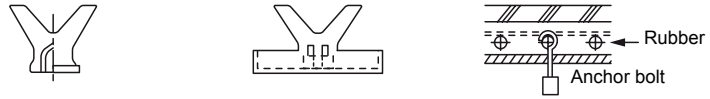

(Blade type bracket) (Slide type bracket) (Pipe hanging anchor bolt)

Existing concrete slab

Use a hole-in anchors, hole-in plugs, or a hole-in bolts.

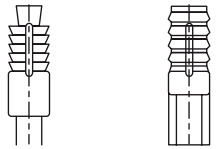

Steel frame structure

Use existing angles or install new support angles.

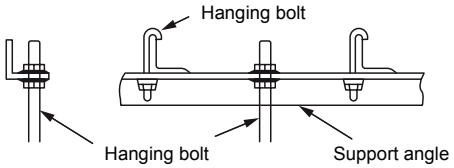

■ Installation of indoor unit

- Attach a nut (M10 or W3/8: procured locally) and the Ø34 washer (supplied) to each hanging bolt.
- Insert a washer on both sides of the T groove of the hanging bracket of the indoor unit, and hang the indoor unit.

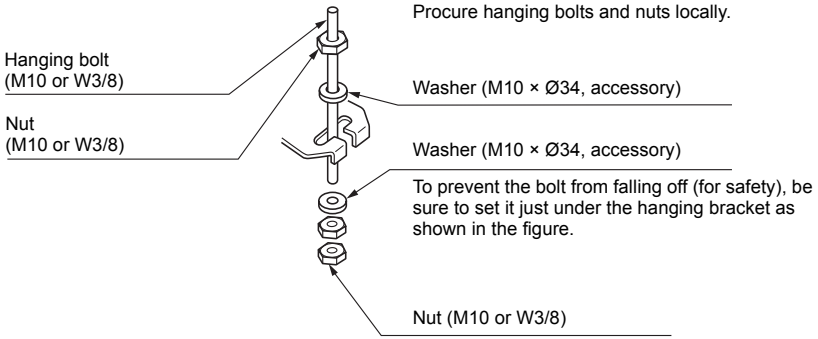

- Check that the four sides of the indoor unit are level using a level vial.
- Detach the installation gauge (accessory) from the installation pattern.
- Use the installation gauge to check and adjust the relative positions of the indoor unit and the ceiling opening as well as the suspension height.
  (Orientation of the installation gauge is printed on the gauge.)
  (1) Check that the bottom panel of the indoor unit is positioned 77 mm higher than the bottom surface of the ceiling panel. (All four corners)
  (2) Check that the clearance between the outlet side (shorter side) of the indoor unit and ceiling panel is 25 mm.
  (3) Check that the clearance between the outlet side (longer side) of the indoor unit and ceiling panel is 74 mm.

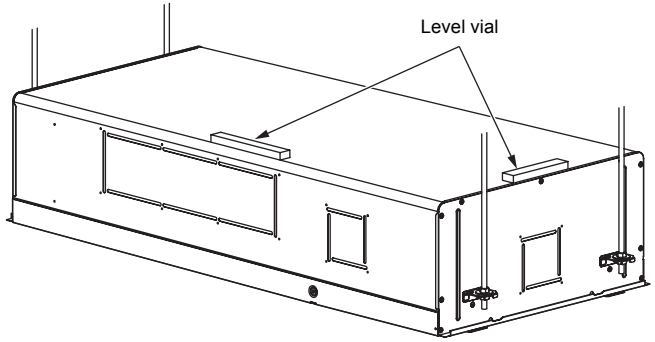

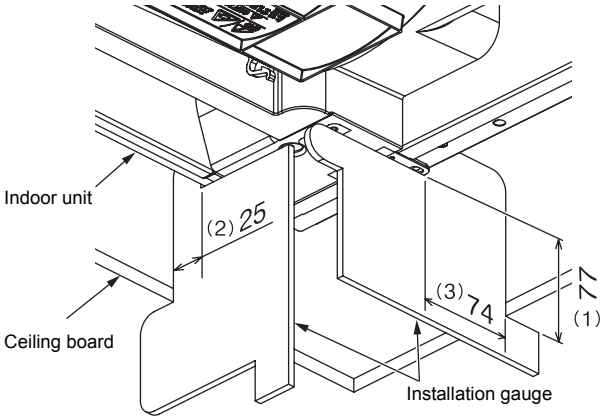

⚠ CAUTION

Before installing a model AP007 to AP015 indoor unit, be absolutely sure to remove the tape used for transportation between the fan and bell mouth. Running the unit without removing the tape may damage the fan motor.

■ Installation of ceiling panel (sold separately)

Install the ceiling panel according to the Installation Manual attached with it after piping/wiring work has completed.
To install the ceiling panel, follow the instructions provided with the panel.
Check that installation of indoor unit and ceiling opening part is correct, and then install it.

⚠ CAUTION

Joint the connecting sections of ceiling panel, ceiling surface, ceiling panel and indoor unit closely.
Any gap between them will cause air leakage and the generate condensation or water leakage.

■ Installation of remote controller (sold separately)

For installation of the remote controller, follow the Installation Manual attached with the remote controller.

- Do not leave the remote controller at a place exposed to the direct sunlight and near a stove.
- Install the remote controller after operating it and checking that the indoor unit can sense its signals properly. (Wireless type)
- Keep the remote controller at least one meter away from a TV set, stereo components or other devices. (Otherwise, the picture may be disrupted or the noise may affect the sound.) (Wireless type)

5 DRAIN PIPING WORK

⚠ CAUTION

FOLLOWING THE INSTALLATION MANUAL, PERFORM THE DRAIN PIPING WORK SO THAT WATER IS PROPERLY DRAINED, AND APPLY A HEAT INSULATION SO AS NOT TO CAUSE A DEW CONDENSATION. INAPPROPRIATE PIPING WORK MAY RESULT IN WATER LEAKAGE IN THE ROOM AND WET OF FURNITURE.

- Provide the indoor drain piping with proper heat insulation.
- Also be absolutely sure to provide the area where the pipe connects to the indoor unit with proper heat insulation. Improper heat insulation will cause condensation to form.
- Ensure that the drain pipe is sloping downward (at an angle of 1/100 or more), and do not run the pipe up and down (arched shape) or allow it to form traps. Doing so may cause abnormal sounds.
- Restrict the length of the traversing drain pipe to 20 meters or less. In the case of a long pipe, provide support brackets at intervals of 1.5 to 2 meters to prevent flapping.
- Install the collective piping as shown in the following figure.
- Do not provide any air vents. Otherwise, the drain water will spout, causing water to leak.
- Do not allow any force to be applied to the connection area with the drain pipe.
- A hard PVC pipe cannot be connected to the drain pipe connecting port of the indoor unit. Be absolutely sure to use the flexible hose provided for the connections with the drain pipe connecting port.
- Adhesive agents cannot be used for the drain pipe connecting port (hard socket) of the indoor unit. Be absolutely sure to secure the pipe using the hose bands provided. Use of an adhesive agent may damage the drain pipe connecting port or cause water to leak.

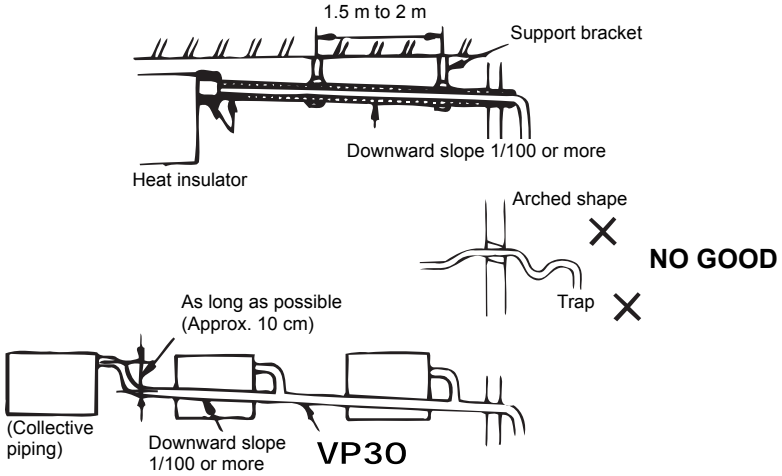

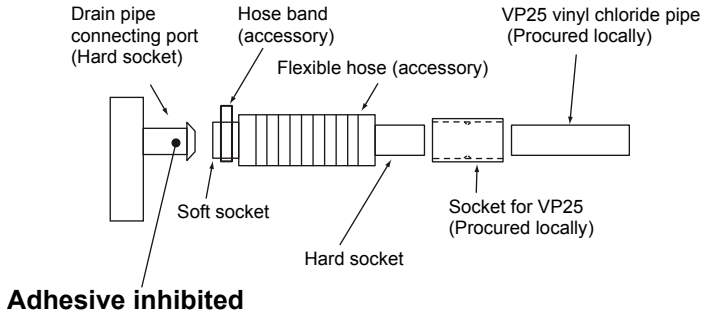

■ Piping/Heat insulating material

Require the following materials for piping and heat insulating at site.

Piping	Socket of hard vinyl chloride pipe for VP25
	Hard vinyl chloride pipe VP25 (Outer dia.: Ø32 mm)
Heat insulator	Foam polyethylene: Thickness 10mm or more

■ Connecting flexible hose

- Insert the soft end socket of the flexible hose provided into the drain pipe connecting port of the indoor unit as far as it will go.
- Align the provided hose band with the end of the pipe connecting port, and tighten it securely.

⚠ CAUTION

- Be absolutely sure to secure the soft end socket with the hose band provided, and ensure that where the band is tightened is facing up.
- Do not use the flexible hose provided with the hose bent to an angle greater than 45° to avoid breakage or clogging.

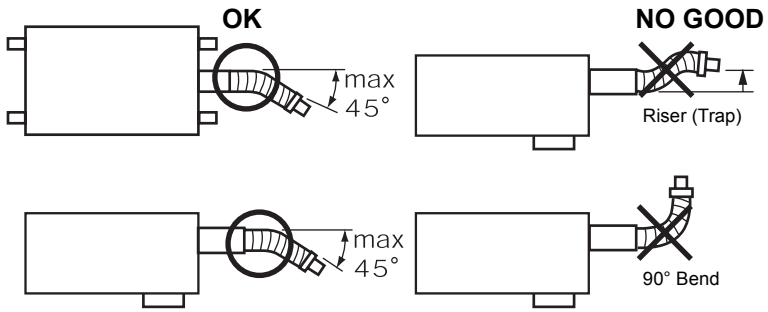

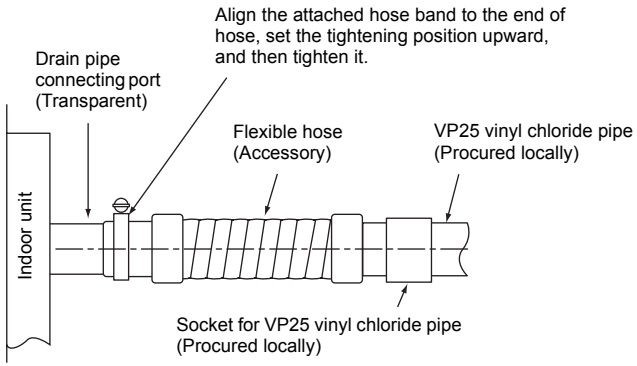

■ Connecting drain pipe

- Connect a hard socket (procured locally) to the hard socket of the attached supplied flexible hose.
- Connect a drain pipe (procured locally) to the connected hard socket.

⚠ CAUTION

- Connect hard vinyl chloride pipes securely using an adhesive for vinyl chloride to avoid water leakage.
- It takes some time until the adhesive is dried and hardened (refer to the manual of the adhesive). Do not apply stress to the joint with the drain pipe during this time period.

■ Drain up

When a down-gradient cannot be secured for the drain pipe, drain-up piping is possible.
- The height of the drain pipe must be 850 mm or less from the underside of the ceiling.
- Take the drain pipe out of the drain pipe joint with the indoor unit in 300 mm or less, and bend up the pipe vertically.
- Immediately after the pipe is bent up vertically, lay the pipe making a down-gradient.

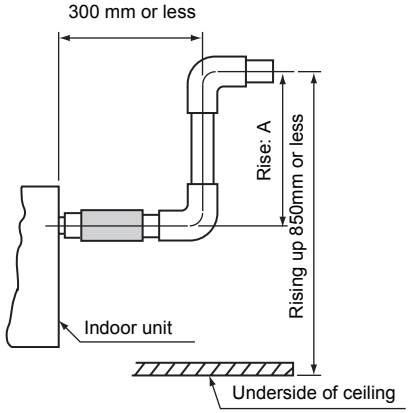

Model: MMU-	Rise: A
AP007 to AP015	609 mm or less
AP018 to AP056	559 mm or less

■ Check the draining

In the test run, check that water drain is properly performed and water does not leak from the connecting part of the pipes. When doing this, also check that no abnormal sounds are heard from the drain pump motor. Be sure to check draining also when installed in heating period.

When the electrical and wiring work has been completed

- Before attaching the panel, pour some water by following the method shown in the following figure. Then, while performing a cooling operation, check that the water drains from the drain pipe connecting port (transparent) and that no water is leaking from the drain pipe.

When the electrical and wiring work has not been completed

- Disconnect the float switch connector (3P: red) from the connector (CN34: red) on the printed circuit board inside the electrical parts box. (Before doing this, be absolutely sure that the power has been turned off.)
- Connect a 220 V to 240 V supply voltage to (L) and (N) on the power supply terminal block. (Never apply a 220 V to 240 V voltage to (A), (B), (U1) or (U2) of the power supply terminal block. Otherwise, the printed circuit board may be damaged.)
- Pour the water by following the method shown in the following figure. (Amount of water poured: 1500 cc to 2000 cc)
- When the power is turned on, the drain pump automatically starts running. Check whether the water is draining from the drain pipe connecting port (transparent), and check that no water is leaking from the drain pipe.
- After checking that the water drains and there are no water leaks, turn off the power, connect the float switch connector to its original location (CN34) on the printed circuit board, and return the electrical parts box to its original position.

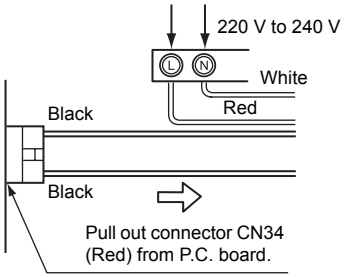

⚠ CAUTION

When pouring the water, pour it slowly. If it is poured with too much force, it will spread around the inside of the indoor unit, possibly causing the unit to malfunction.

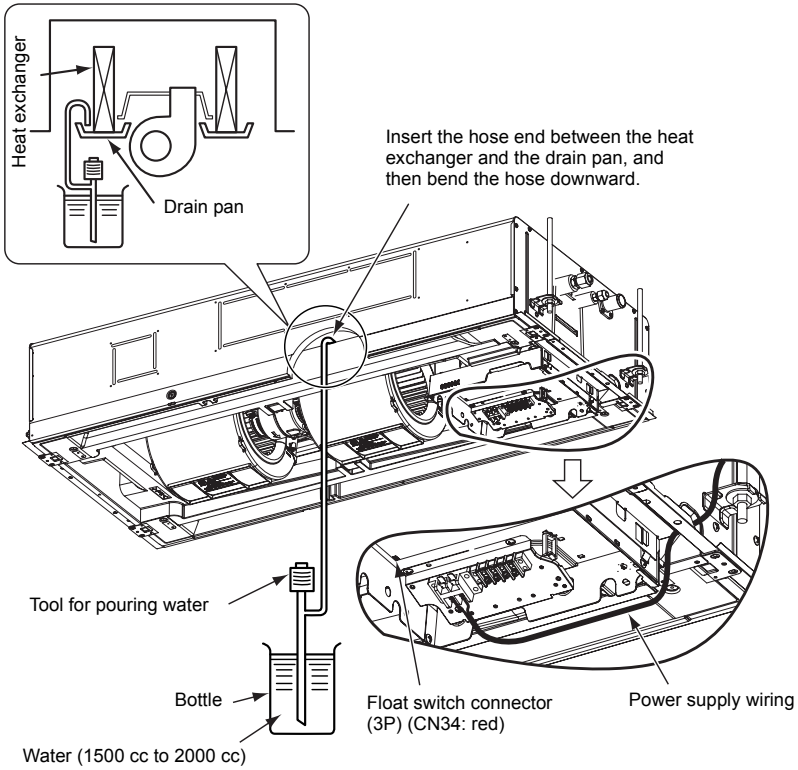

■ Perform heat insulating

- As shown in the figure, cover the flexible hose and hose band with the attached heat insulator up to the bottom of the indoor unit tightly.
- Cover the drain pipe tightly with a heat insulator procured locally so that it overlaps with the attached heat insulator of the drain connecting section.

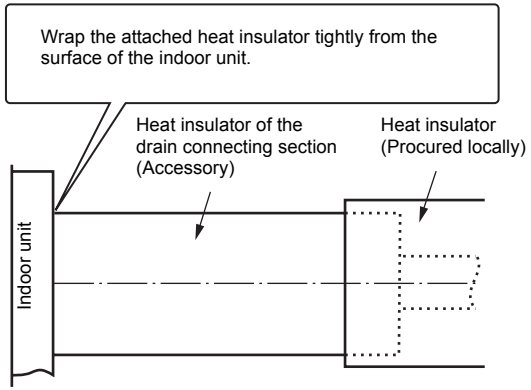

6 REFRIGERANT PIPING

⚠ CAUTION

When the refrigerant pipe is long, provide support brackets at intervals of 2.5 m to 3 m to clamp the refrigerant pipe. Otherwise, abnormal sound may be generated.
Be sure to use the flare nut attached with the indoor unit or R410A flare nut.

■ Permissible piping length and height difference

They vary depending on the outdoor unit. For details, refer to the Installation Manual attached to the outdoor unit.

■ Pipe size

Model: MMU-	Pipe size (mm)	
	Gas side	Liquid side
AP007 to AP012	Ø9.5	Ø6.4
AP015 to AP018	Ø12.7	Ø6.4
AP024 to AP056	Ø15.9	Ø9.5

■ Connecting refrigerant piping

Flaring

1. Cut the pipe with a pipe cutter.
   Remove burrs completely. (Remaining burrs may cause gas leakage.)
2. Insert a flare nut into the pipe, and flare the pipe.
   Use the flare nut provided with the unit or the one used for the R410A refrigerant. The flaring dimensions for R410A are different from the ones used for the conventional R22 refrigerant. A new flare tool manufactured for use with the R410A refrigerant is recommended, but the conventional tool can still be used if the projection margin of the copper pipe is adjusted to be as shown in the following table.

Projection margin in flaring: B (Unit: mm)

Outer diam. of copper pipe	R410A tool used	Conventional tool used
6.4, 9.5	0 to 0.5	1.0 to 1.5
12.7, 15.9		

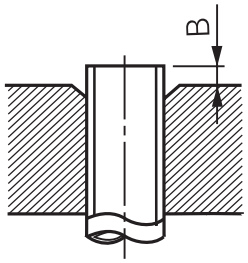

Flaring dia. meter size: A (Unit: mm)

Outer diam. of copper pipe	$A^{+0}_{-0.4}$
6.4	9.1
9.5	13.2
12.7	16.6
15.9	19.7

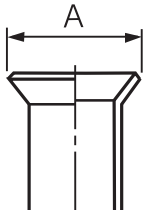

* In case of flaring for R410A with the conventional flare tool, pull it out approx. 0.5 mm more than that for R22 to adjust to the specified flare size.
The copper pipe gauge is useful for adjusting projection margin size.

- The sealed gas was sealed at the atmospheric pressure so when the flare nut is removed, there will no “whooshing” sound: This is normal and is not indicative of trouble.
- Be absolutely sure to use two wrenches to connect the indoor unit pipe.

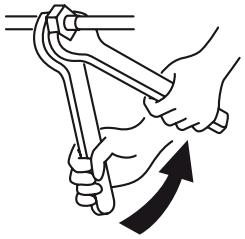

Work using double spanner

- Use the tightening torque levels as listed in the table below.

Outer dia. of connecting pipe (mm)	Tightening torque (N•m)
6.4	14 to 18 (1.4 to 1.8 kgf•m)
9.5	33 to 42 (3.3 to 4.2 kgf•m)
12.7	50 to 62 (5.0 to 6.2 kgf•m)
15.9	63 to 77 (6.3 to 7.7 kgf•m)

- Tightening torque of flare pipe connections
  Pressure of R410A is higher than that of R22. (Approx. 1.6 times) Therefore, using a torque wrench, tighten the flare pipe connecting sections which connect the indoor and outdoor units of the specified tightening torque.
  Incorrect connections may cause not only a gas leak, but also a trouble of the refrigeration cycle.

⚠ CAUTION

Tightening with an excessive torque may crack the nut depending on installation conditions.

■ Airtight test/Air purge, etc.

For airtight test, air purge, addition of refrigerant, and gas leak check, refer to the Installation Manual attached to the outdoor unit.

⚠ CAUTION

Do not supply power to the indoor unit until the airtight test and vacuuming are completed. (If the indoor unit is powered on, the pulse motor valve is fully closed, which extends the time for vacuuming.)

■ Open the valve fully

Open the valve of the outdoor unit fully.

■ Thermal insulation process

Apply thermal insulation for the pipes separately at liquid side and gas side.

- For the thermal insulation to the pipes at gas side, be sure to use the material with heat-resisting temperature 120°C or higher.
- Using the attached thermal insulation material, apply the thermal insulation to the pipe connecting section of the indoor unit securely without gap.

⚠ CAUTION

Apply the thermal insulation to the pipe connecting section of the indoor unit securely up to the root without exposure of the pipe. (The pipe exposed to the outside causes water leak.)

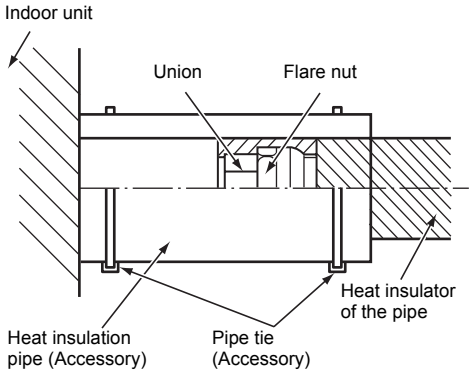

7 ELECTRICAL WORK

⚠ WARNING

1. **Using the specified wires, ensure to connect the wires, and fix wires securely so that the external tension to the wires do not affect the connecting part of the terminals.**
   Incomplete connection or fixation may cause a fire, etc.
2. **Be sure to connect earth wire. (grounding work)**
   Incomplete earthing cause an electric shock.
   Do not connect earth wires to gas pipes, water pipes, lightning rods or earth wires for telephone wires.
3. **Appliance shall be installed in accordance with national wiring regulations.**
   Capacity shortage of power circuit or incomplete installation may cause an electric shock or a fire.

⚠ CAUTION

- If incorrect/incomplete wiring is carried out, it will cause an electrical fire or smoke.
- Be sure to install an earth leakage breaker that is not tripped by shock waves.
  If an earth leakage breaker is not installed, an electric shock may be caused.
- Be sure to use the cord clamps attached to the product.
- Do not damage or scratch the conductive core and inner insulator of power and inter-connecting wires when peeling them.
- Use the power cord and Inter-connecting wire of specified thickness, type, and protective devices required.
- Never connect 220 V – 240 V power to the terminal blocks (U1, U2, A, B, etc.) for control wiring.(Otherwise, the system will fail.)

REQUIREMENT

- For power supply wiring, strictly conform to the Local Regulation in each country.
- For wiring of power supply of the outdoor units, follow the Installation Manual of each outdoor unit.
- Perform the electric wiring so that it does not come to contact with the high-temperature part of the pipe. The coating may melt resulting in an accident.
- After connecting wires to the terminal blocks, provide a trap and fix wires with the cord clamp.
- Run the refrigerant piping line and control wiring line in the same line.
- Do not turn on the power of the indoor unit until vacuuming of the refrigerant pipes completes.

■ Power supply wire and communication wires specifications

Power supply wire and communication wires are procured locally.
For the power supply specifications, follow to the table below. If capacity is little, it is dangerous because overheat or burnout may be caused.
For specifications of the power capacity of the outdoor unit and the power supply wires, refer to the Installation Manual attached to the outdoor unit.

Indoor unit power supply

- For the power supply of the indoor unit, prepare the exclusive power supply separated from that of the outdoor unit.
- Arrange the power supply, circuit breaker, and main switch of the indoor unit connected to the same outdoor unit so that they are commonly used.
- Power supply wire specification: Cable 3-core 2.5 mm², **in conformity with Design 60245 IEC 57.**

Power supply

Power supply	220 V – 240 V ~, 50 Hz 220 V ~, 60 Hz	
Power supply switch/circuit breaker or power supply wiring/fuse rating for indoor units should be selected by the accummulated total current values of the indoor units.		
Power supply wiring	Below 50 m	2.5 mm²

Control wiring, Central controller wiring

- 2-core with polarity wires are used for the Control wiring between indoor unit and outdoor unit and Central controller wiring.
- To prevent noise trouble, use 2-core shield wire.
- The length of the communication line means the total length of the inter-unit wire length between indoor and outdoor units added with the central control system wire length.

Communication line

Control wiring between indoor units, and outdoor unit (2-core shield wire)	Wire size	(Up to 1000 m) 1.25 mm² (Up to 2000 m) 2.0 mm²
Central control line wiring (2-core shield wire)	Wire size	(Up to 1000 m) 1.25 mm² (Up to 2000 m) 2.0 mm²

Remote controller wiring

- 2-core with non-polarity wire is used for wiring of the remote controller wiring and group remote controllers wiring.

Remote controller wiring, remote controller inter-unit wiring	Wire size: 0.5 mm² to 2.0 mm²

Total wire length of remote controller wiring and remote controller inter-unit wiring = L + L1 + L2 + … Ln	In case of wired type only	Up to 500 m
	In case of wireless type included	Up to 400 m
Total wire length of remote controller inter-unit wiring = L1 + L2 + … Ln		Up to 200 m

⚠ CAUTION

The remote controller wire (Communication line) and AC220–240V wires cannot be parallel to contact each other and cannot be stored in the same conduits. If doing so, a trouble may be caused on the control system due to noise, etc.

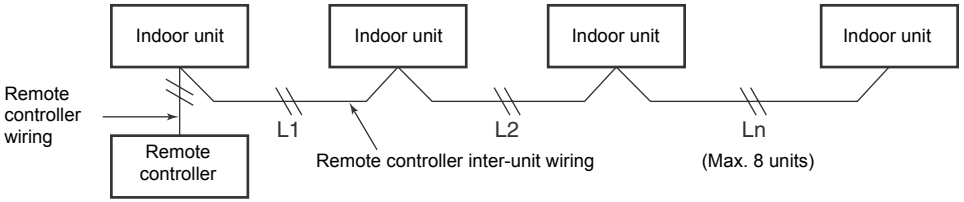

■ Wire connection

REQUIREMENT

- Be sure to pass the wires through the bushing of wiring connection port of the indoor unit.
- Keep a margin (Approx. 100 mm) on a wire to hang down the electric parts box at servicing, etc.
- The low-voltage circuit is provided for the remote controller.

- Remove the two screws used to mount the cover of the electrical parts box, and slide the cover to open it. (The cover of the electric parts box remains hanged to the hinge.)
- Connect the power cable, indoor/outdoor inter-unit wire and remote controller wire to the terminal block of the electrical parts box.
- Tighten the screws of the terminal block, and fix the wires with cord clamp attached to the electric parts box. (Do not apply tension to the connecting section of the terminal block.)
- Using the attached thermal insulation material, seal the pipe connecting port. Otherwise, dewing may be caused.
- Mount the cover of the electric parts box without pinching wires. (Mount the cover after wiring on the ceiling panel.)
- Pass the wires underneath the flashing protrusion of the drain pan, and stow them inside the wiring guide of the electrical parts box cover.

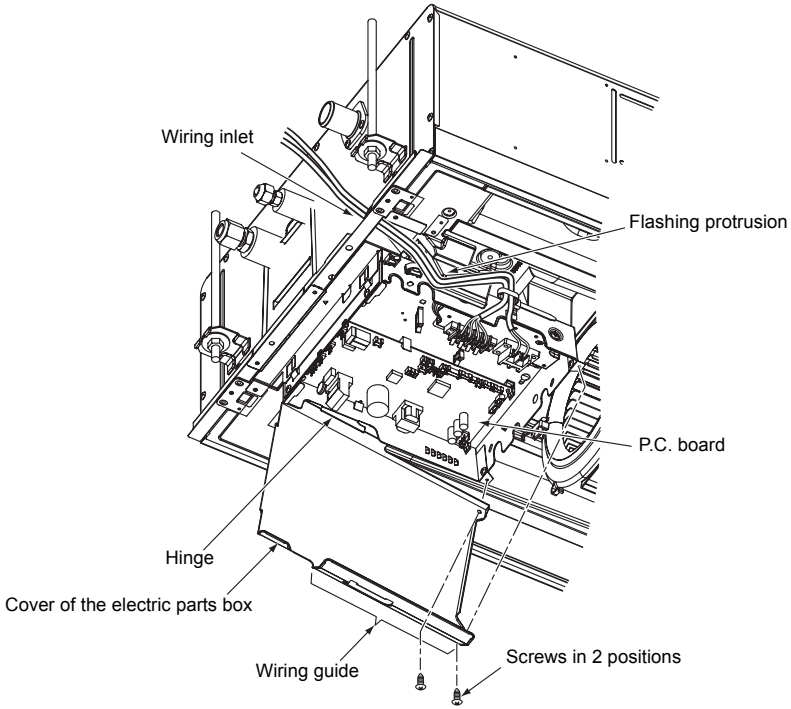

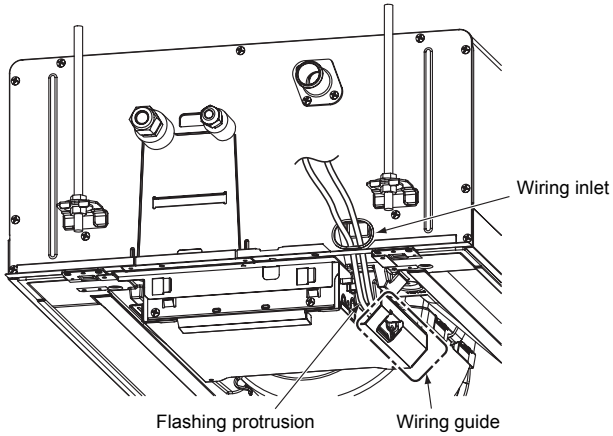

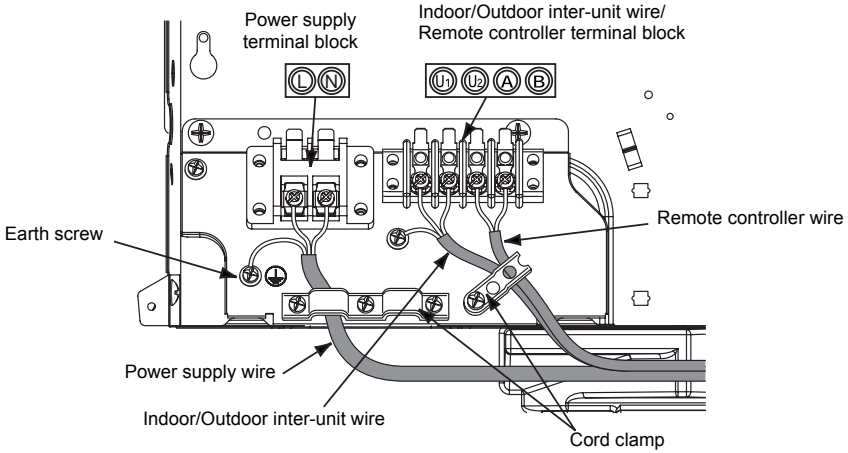

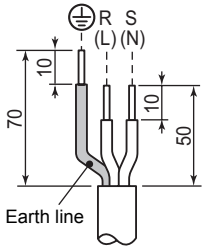

Power supply wire

Thermal insulation to wiring connecting port

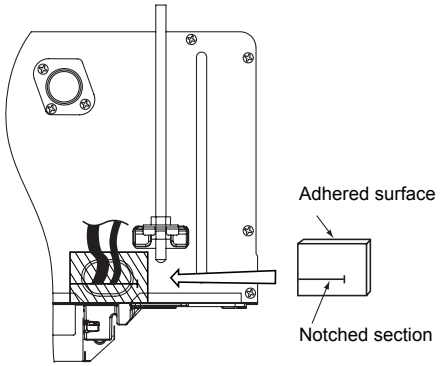

■ Remote controller wiring

- As the remote controller wire has non-polarity, there is no problem if connections to indoor unit terminal blocks A and B are reversed.

Wiring diagram

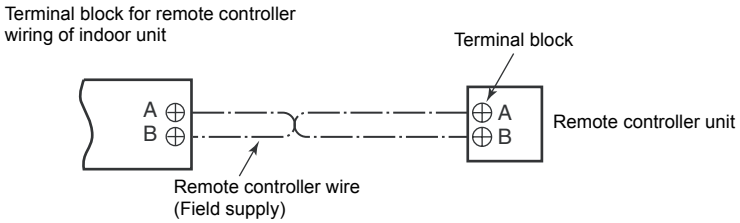

■ Address setup

Set up the addresses as per the Installation Manual supplied with the outdoor unit.

■ Wiring on the ceiling panel

According to the Installation Manual of the ceiling panel, connect the connector (5P: White) of the ceiling panel to the connector (CN33: White) on P.C. board of the electric parts box.

■ Wiring between indoor and outdoor units

NOTE

An outdoor unit connected with control wiring between indoor and outdoor units wire becomes automatically the header unit.

Wiring example

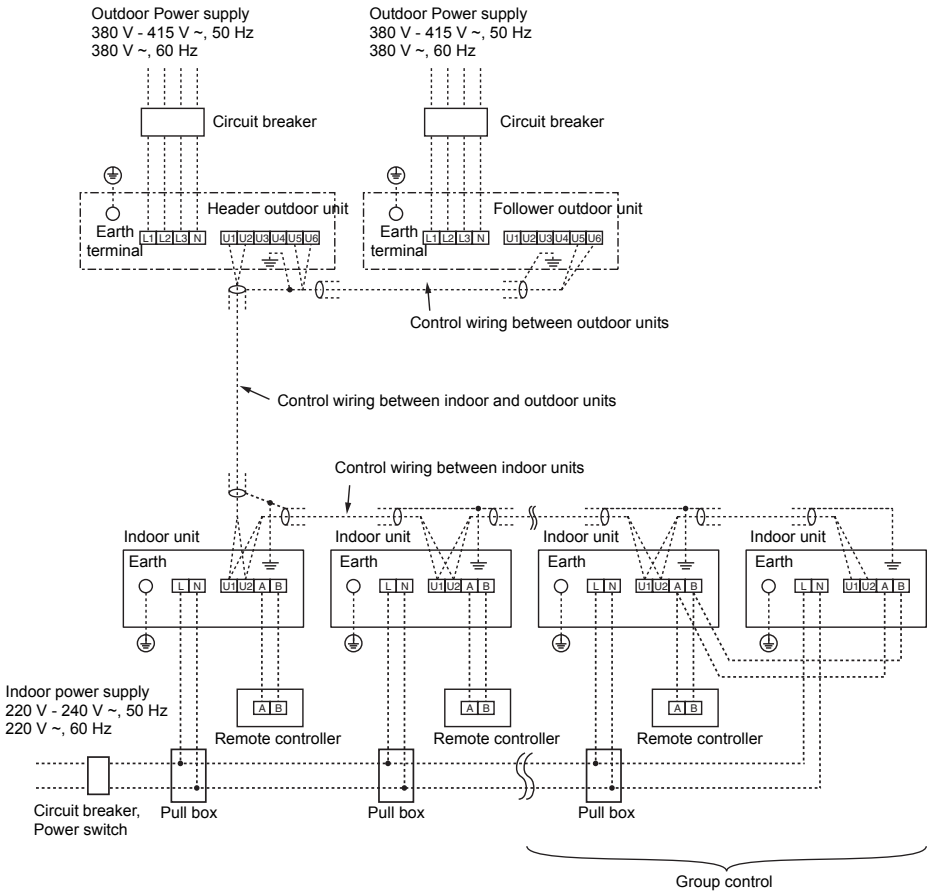

8 APPLICABLE CONTROLS

REQUIREMENT

When using the air conditioner for the first time, it will take some moments after the power has been turned on before the remote controller becomes available for operations: This is normal and is not indicative of trouble.

- Concerning the automatic addresses (The automatic addresses are set up by performing operations on the outdoor interface circuit board.)
  While the automatic addresses are being set up, no remote controller operations can be performed. Setup takes up to 10 minutes (usually about 5 minutes).
- When the power is turned on after automatic address setup
  It takes up to 10 minutes (usually about 3 minutes) for the outdoor unit to start operating after the power has been turned on.

Before the air conditioner was shipped from the factory, all units are set to [STANDARD] (factory setting). If necessary, change the indoor unit settings.
The settings are changed by operating the wired remote controller.

* The settings cannot be changed using only a wireless remote controller, simple remote controller or group control remote controller by itself so install a wired remote controller separately as well.

■ Basic procedure for changing settings

Change the settings while the air conditioner is not working. (Be sure to stop the air conditioner before making settings.)

Requirement when setting the CODE No.

Set only the CODE No. shown in the following table: Do NOT set any other CODE No.
If a CODE No. not listed is set, it may not be possible to operate the air conditioner or other trouble with the product may result.

* The displays appearing during the setting process differ from the ones for previous remote controllers (AMT31E). (There are more CODE No.)

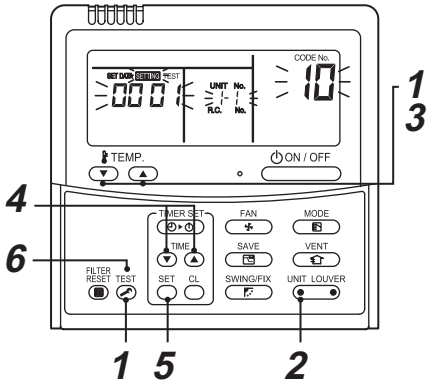

1 Push and hold TEST button and "TEMP." ▼ button simultaneously for at least 4 seconds. After a while, the display flashes as shown in the figure. Confirm that the CODE No. is [10].

- If the CODE No. is not [10], push TEST button to clear the display content, and repeat the procedure from the beginning. (No operation of the remote controller is accepted for a while after TEST button is pushed.)
  (While air conditioners are operated under the group control, "ALL" is displayed first. When UNIT LOUVER is pushed, the indoor unit number displayed following "ALL" is the header unit.)

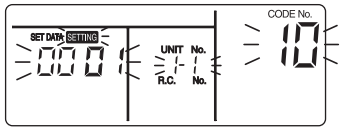

(* Display content varies with the indoor unit model.)

2 Each time you push UNIT LOUVER button, indoor unit numbers in the control group change cyclically. Select the indoor unit you want to change settings for.
The fan of the selected unit runs and the louvers start swinging. You can confirm the indoor unit for which you want to change settings.

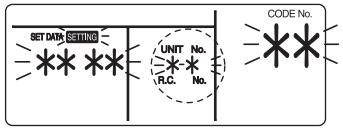

3 Using "TEMP." ▼ / ▲ buttons, specify CODE No. [✱✱].

4 Using timer "TIME" ▼ / ▲ buttons, select SET DATA [✱✱✱✱].

5 Push SET button. When the display changes from flashing to lit, the setup is completed.

- To change settings of another indoor unit, repeat from Procedure ***2***.
- To change other settings of the selected indoor unit, repeat from Procedure ***3***.

Use SET button to clear the settings. To make settings after SET button was pushed, repeat from Procedure ***2***.

6 When settings have been completed, push TEST button to determine the settings.
When TEST button is pushed, SETTING flashes and then the display content disappears and the air conditioner enters the normal stop mode.
(While SETTING is flashing, no operation of the remote controller is accepted.)

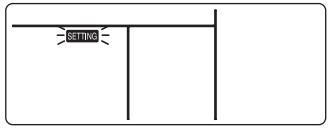

■ Installing indoor unit on high ceiling

When the ceiling on which the indoor unit is to be installed is higher than 2.7 meters, the air volume must be adjusted so establish the high-ceiling setting.

- Follow to the basic operation procedure (***1*** → ***2*** → ***3*** → ***4*** → ***5*** → ***6***).
- For the CODE No. in Procedure ***3***, specify [5d].
- Select the SET DATA for Procedure ***4*** from the "Height list of ceiling possible to be installed" table in this manual.

■ When installing separately sold filters

Be sure to make Filter setting when installing separately sold filters.

* Separately sold filters cannot be installed in an indoor unit on a high ceiling.

- The operating procedure is the same as that for "Installing indoor unit on high ceiling."
- As the SET DATA in procedure ***4***, select the SET DATA of the filter installed from the table below.

SET DATA	Filter
0000	Normal filter (Factory setting)
0001	Super long life filter

■ With a remote controller-less system (group control)

Besides the switching method using the wired remote controller as a way to establish the high-ceiling and filter settings, switching is also possible by changing over the short plug settings on the indoor printed circuit board as shown in the following table.

* However, once these settings are changed, 0001 can be set easily, but bear in mind that to return to the 0000 data, it will be necessary to change the short plugs over to the standard (factory setting) positions and rewrite the data back to SET DATA 0000 from the wired remote controller.

- Change over the short plugs on the indoor printed circuit board, and select the desired setting.

Short plug positions (CN112, CN111 and CN110 from the left)

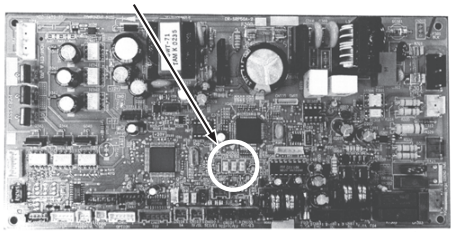

Short plug position Short Open	CN112 CN111 CN110	CN112 CN111 CN110	CN112 CN111 CN110
SET DATA	0000	0001	0003
Ceiling height	2.7 m	3.2 m (AP007 to AP030)	3.8 m (AP007 to AP030)
		3.0 m (AP036 to AP056)	3.5 m (AP036 to AP056)
Filter	Standard filter (Factory setting)	Super long life filter	—

■ Change of lighting time of filter sign

According to the installation condition, the lighting time of the filter sign (Notification of filter cleaning) can be changed.
Follow the basic operation procedure
(***1*** → ***2*** → ***3*** → ***4*** → ***5*** → ***6***).

- For the CODE No. in Procedure ***3***, specify [01].
- For the SET DATA in Procedure ***4***, select the SET DATA of Filter sign lighting time from the following table.

SET DATA	Filter sign lighting time
0000	None
0001	150 hours
0002	2500 hours (Factory setting)
0003	5000 hours
0004	10000 hours

■ To secure better effect of heating

When it is difficult to obtain satisfactory heating due to installation place of the indoor unit or structure of the room, the detection temperature of heating can be raised. Also use a circulator, etc. to circulate heat air near the ceiling.
Follow the basic operation procedure
(***1*** → ***2*** → ***3*** → ***4*** → ***5*** → ***6***).

- For the CODE No. in Procedure ***3***, specify [06].
- For the SET DATA in Procedure ***4***, select the SET DATA of Detection temp shift value to be set up from the following table.

SET DATA	Detection temp shift value
0000	No shift
0001	+1°C
0002	+2°C (Factory setting)
0003	+3°C
0004	+4°C
0005	+5°C
0006	+6°C

■ Group control

In a group control, a remote controller can control up to maximum 8 units.

- For wiring procedure and wiring method of the individual line (Identical refrigerant line) system, refer to “ELECTRICAL WORK” in this Manual.
- Wiring between indoor units in a group is performed in the following procedure.
  Connect the indoor units by connecting the remote controller inter-unit wires from the remote controller terminal blocks (A/B) of the indoor unit connected with a remote controller to the remote controller terminal blocks (A/B) of the other indoor unit. (Non-polarity)
- For address setup, refer to the Installation Manual attached to the outdoor unit.

■ Ventilator (procured locally)

Select this setting when a locally procured ventilator has been connected.
Follow the basic operation procedure
(***1*** → ***2*** → ***3*** → ***4*** → ***5*** → ***6***).

- For the CODE No. in Procedure ***3***, specify [31].
- Select “0001” as the SET DATA in procedure ***4***.

SET DATA	Ventilator
0000	Not provided (Factory setting)
0001	Provided

9 TEST RUN

■ Before test run

- Before turning on the power supply, carry out the following procedure.
  1. Using 500 V-megger, check that resistance of 1 MΩ or more exists between the terminal block of the power supply and the earth (earthing). If resistance of less than 1 MΩ is detected, do not run the unit.
  2. Check all valve of the outdoor unit being opened fully.
- To protect the compressor at activation time, leave power-ON for 12 hours or more be for operating.
- Never press the electromagnetic contactor to forcibly perform a test run. (This is very dangerous because the protective device does not work.)
- Before starting a test run, be sure to set addresses following the Installation Manual supplied with the outdoor unit.

■ How to execute a test run

- When a fan operation is to be performed for an individual indoor unit, turn off the power, short CN72 on the circuit board, and then turn the power back on. (First set the operating mode to “fan,” and then operate.) When the test run has been performed using this method, do NOT forget to release the shorting of CN72 after the test run is completed.
- Using the remote controller, operate the unit as usual. For the procedure of the operation, refer to the attached Owner’s Manual. A forced test run can be executed in the following procedure even if the operation stops by thermo.-OFF. In order to prevent a continuous operation, the forced test run is released after 60 minutes have passed and returns to the usual operation.

⚠ CAUTION

Do not use the forced test run for cases other than the test run because it applies an excessive load to the devices.

In case of wired remote controller

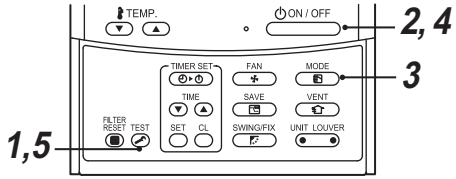

1 When the TEST button is pressed and held for at least 4 seconds, “TEST” appears on the display, and the test run mode is established.
(While the test run is underway, “TEST” remains on the display.)

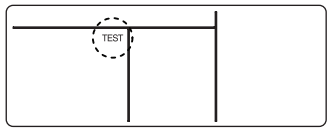

2 Push ON / OFF button.

3 Using MODE button, select the operation mode, [❄ COOL] or [☀ HEAT].
- Do not run the air conditioner in a mode other than [❄ COOL] or [☀ HEAT].
- The temperature controlling function does not work during test run.
- The detection of error is performed as usual.

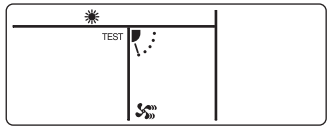

4 After the test run, push ON / OFF button to stop a test run.
(Display part is same as procedure ***1***.)

5 Push TEST check button to cancel the test run mode.
([TEST] disappears on the display and the status returns to a normal.)

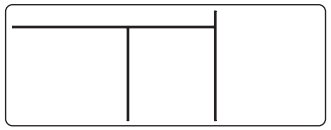

In case of wireless remote controller

(RBC-AX32UW(W)-E)

1 **When TEMPORARY button is pushed for 10 seconds or more, “Pi!” sound is heard and the operation changes to a forced cooling operation. After approx. 3 minutes, a cooling operation starts forcedly.**
Check cool air starts blowing. If the operation does not start, check wiring again.

2 **To stop a test operation, push TEMPORARY button once again (Approx. 1 second).**
- Check wiring / piping of the indoor and outdoor units in forced cooling operation.

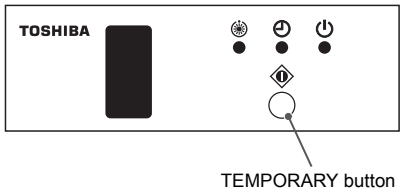

10 MAINTENANCE

⚠ CAUTION

- **Before maintenance, be sure to turn off the circuit breaker.**
- **Do not clean the filter with all the hooks of the center panel disengaged and with only one or two wires still attached to the center panel. Doing so may cause the center panel to fall down, possibly causing injury to any individuals below.**

Cleaning of air filter

- If ▦ is displayed on the remote controller, maintain the air filter.
- Clogging of the air filter reduce cooling/heating performance.

Cleaning of panel and air filter

1. Turn off the air conditioner
   - Set the circuit breaker to OFF.
2. Open the center panel
   - Loosen the screws on the center panel holders fixed to the frame covers by turning them about three times. There is a frame cover on each long side of the panel.
     While removing the center panel, as the panel moves, the panel pushes the center panel holders and makes the holders slide.

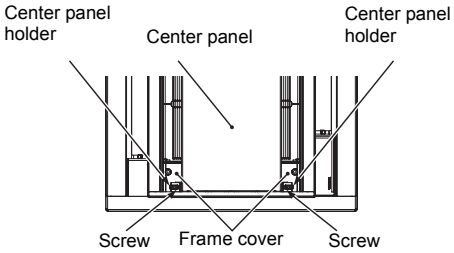

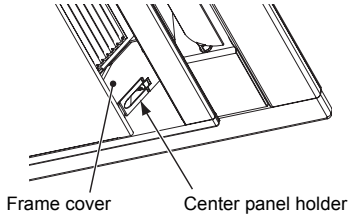

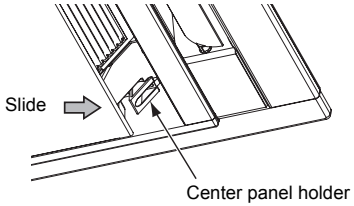

- The direction in which the center panel opens is fixed.
  The side that moves when the edge of the center panel is pushed upward is the end that opens; the end that barely moves is the hooking side.

2-1. While pushing the edge at the opening side of the center panel upward (1), pull the panel toward the opening side (2).

2-2. When the panel is pulled toward the opening side, the hooking side drops down by one step, and the hooks at the opening side are disengaged.

* Take hold of the center panel near the hooks at both ends, and disengage the opening side hooks one at a time.
  If the center panel holders refuse to slide, loosen the screws a little more using the screwdriver.

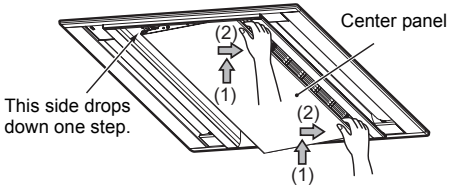

2-3. Once you have checked that the hooking side at both ends has dropped down by one step, slowly rotate the panel downward (3), and open it.

* The center panel opens until there is no more slack in the wires at both ends.

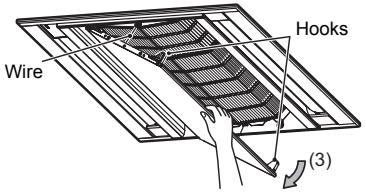

3. Remove the air filter
   - Take hold of the air filter knobs, and while pushing the filter diagonally (1), pull it downward (2), and remove it from the openings of the center panel.

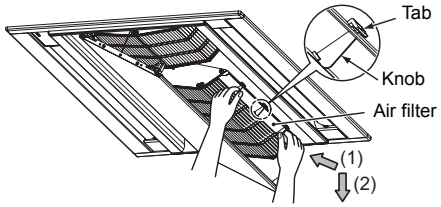

4. Remove the dust using a vacuum cleaner or rinsing it off in water
   - When dust has accumulated on the filter, it can be cleaned effectively using lukewarm or cold water into which some neutral detergent has been dissolved.
   - After rinsing off the filter, allow it dry out in the shade.

5. Mount the air filter
   - Insert the air filter until it touches the back surface. Take hold of the knobs, raise the air filter until it touches the back surface, left go of the knobs, and install.

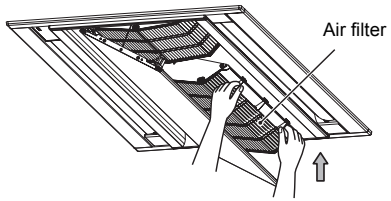

6. Close the center panel
   - Slowly rotate the center panel upward (1), and close it.

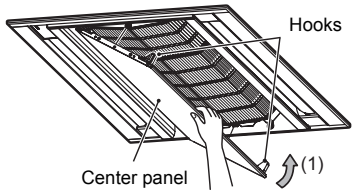

- With the opening side of the center panel now closed, while lifting the step of the hooking side (2), slide the center panel toward the hooking side (3), and secure it.
  * Take hold of the center panel near the hooks at both ends, and engage the hooks one at a time.

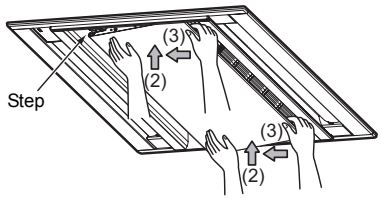

7. Return the center panel holders to their original positions, and tighten the two screws at the left and two screws at the right (total: 4 screws) using the screwdriver.
   Make sure that the center panel is securely fixed with the center panel holders and does not open.
8. Check the filter
   - From the two intakes, check that the filter tabs are not disengaged. If they are, take hold of the knobs, and push the filter in so that the tabs are inserted.
9. Set the circuit breaker to ON.
   - Push FILTER RESET button.
   - "FILTER ▦" disappears.

⚠ CAUTION

- Do not start the air conditioner while leaving the panel and air filter removed.
- Push FILTER RESET button. (▦ indication will be turned off.)

11 TROUBLE SHOOTING

■ Confirmation and check

When a trouble occurred in the air conditioner, the check code and the indoor unit No. appear on the display part of the remote controller.
The check code is only displayed during the operation.
If the display disappears, operate the air conditioner according to the following "Confirmation of error history" for confirmation.

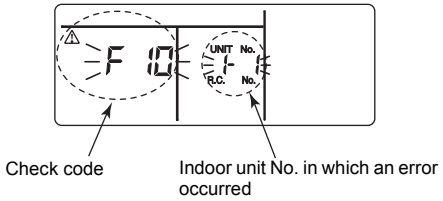

■ Confirmation of error history

When a trouble occurred on the air conditioner, the trouble history can be confirmed with the following procedure. (The trouble history is stored in memory up to 4 troubles.)
The history can be confirmed from both operating status and stop status.

1 When pushing and holding SET and TEST buttons at the same time for 4 seconds or more, the following display appears.
If [🔧 Service check] is displayed, the mode enters in the trouble history mode.
- [**01** : Order of trouble history] is displayed in CODE No. window.
- [Check code] is displayed in CHECK window.
- [Indoor unit No. in which an error occurred] is displayed in Unit No.

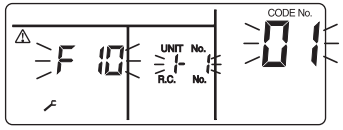

2 Every pushing of "TEMP." ▼ / ▲ button used to set temperature, the trouble history stored in memory is displayed in order.
The numbers in CODE No. indicate CODE No. [**01**] (latest) → [**04**] (oldest).

⚠ CAUTION

Do not push CL button because all the trouble history of the indoor unit will be deleted.

3 After confirmation, push TEST button to return to the usual display.

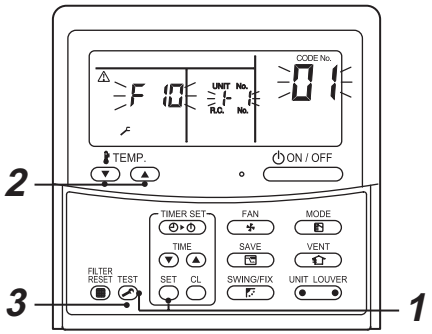

Check method

On the wired remote controller, central control remote controller and the interface P.C. board of the outdoor unit (I/F), a check display LCD (Remote controller) or 7-segment display (on the outdoor interface P.C. board) to display the operation is provided. Therefore the operation status can be known. Using this self-diagnosis function, a trouble or position with error of the air conditioner can be found as shown in the table below.

Check code list

The following list shows each check code. Find the check contents from the list according to part to be checked.

- In case of check from indoor remote controller: See “Wired remote controller display” in the list.
- In case of check from outdoor unit: See “Outdoor unit 7-segment display” in the list.
- In case of check from indoor unit with a wireless remote controller: See “Sensor block display of receiving unit” in the list.

○: Lighting, ◌: Flashing, ●: Goes off
IPDU: Intelligent Power Drive Unit
ALT : Flashing is alternately when there are two flashing LED.
SIM : Simultaneous flashing when there are two flashing LED.

Check code			Wireless remote controller				Check code name	Judging device
Wired remote controller display	Outdoor unit 7-segment display		Sensor block display of receiving unit					
		Auxiliary code	Operation	Timer	Ready	Flash		
E01	—	—	◌	●	●		Communication error between indoor unit and remote controller (Detected at remote controller side)	Remote controller
E02	—	—	◌	●	●		Remote controller transmission error	Remote controller
E03	—	—	◌	●	●		Communication error between indoor unit and remote controller (Detected at indoor unit side)	Indoor unit
E04	—	—	●	●	◌		Communication circuit error between indoor/outdoor unit (Detected at indoor unit side)	Indoor unit
E06	E06	No. of indoor units in which sensor has been normally received	●	●	◌		Decrease of No. of indoor units	I/F
—	E07	—	●	●	◌		Communication circuit error between indoor/outdoor unit (Detected at outdoor unit side)	I/F
E08	E08	Duplicated indoor unit addrsses	◌	●	●		Duplicated indoor unit addresses	Indoor unit • I/F
E09	—	—	◌	●	●		Duplicated master remote controllers	Remote controller
E10	—	—	◌	●	●		Communication error between indoor unit MCU	Indoor unit
E12	E12	01: Indoor/Outdoor units communication 02: Outdoor/Outdoor units communication	◌	●	●		Automatic address start error	I/F
E15	E15	—	●	●	◌		No indoor unit during automatic addressing	I/F
E16	E16	00: Capacity over 01 ~: No. of connected units	●	●	◌		Capacity over / No. of connected indoor units	I/F
E18	—	—	◌	●	●		Communication error between header and follower units	Indoor unit
E19	E19	00: No header 02: Two or more header units	●	●	◌		Outdoor header units quantity error	I/F

Check code			Wireless remote controller				Check code name	Judging device
Wired remote controller display	Outdoor unit 7-segment display		Sensor block display of receiving unit					
		Auxiliary code	Operation	Timer	Ready	Flash		
E20	E20	01: Outdoor unit of other line connected 02: Indoor unit of other line connected	●	●	☼		Other line connected during automatic address	I/F
E21	E21	02: No header unit 00: Multiple number of header units	●	●	☼		Error in number of heat storage master units	I/F
E22	E22	—	●	●	☼		Reduction in number of heat storage units	I/F
E23	E23	—	●	●	☼		Sending error in communication between outdoor units Error in number of heat storage units (trouble with reception)	I/F
E25	E25	—	●	●	☼		Duplicated follower outdoor addresses	I/F
E26	E26	No. of outdoor units which received signal normally	●	●	☼		Decrease of No. of connected outdoor units	I/F
E28	E28	Detected outdoor unit number	●	●	☼		Follower outdoor unit error	I/F
E31	E31	Number of IPDU (*1)	●	●	☼		IPDU communication error	I/F
F01	—	—	☼	☼	●	ALT	Indoor unit TCJ sensor error	Indoor unit
F02	—	—	☼	☼	●	ALT	Indoor unit TC2 sensor error	Indoor unit
F03	—	—	☼	☼	●	ALT	Indoor unit TC1 sensor error	Indoor unit
F04	F04	—	☼	☼	○	ALT	TD1 sensor error	I/F
F05	F05	—	☼	☼	○	ALT	TD2 sensor error	I/F
F06	F06	01: TE1 sensor 02: TE2 sensor	☼	☼	○	ALT	TE1 sensor error TE2 sensor error	I/F
F07	F07	—	☼	☼	○	ALT	TL sensor error	I/F
F08	F08	—	☼	☼	○	ALT	TO sensor error	I/F
F10	—	—	☼	☼	●	ALT	Indoor unit TA sensor error	Indoor unit
F12	F12	—	☼	☼	○	ALT	TS1 sensor error	I/F
F13	F13	01: Comp. 1 side 02: Comp. 2 side 03: Comp. 3 side	☼	☼	○	ALT	TH sensor error	IPDU
F15	F15	—	☼	☼	○	ALT	Outdoor unit temp. sensor miscabling (TE, TL)	I/F
F16	F16	—	☼	☼	○	ALT	Outdoor unit pressure sensor miscabling (Pd, Ps)	I/F
F22	F22	—	☼	☼	○	ALT	TD3 sensor error	I/F
F23	F23	—	☼	☼	○	ALT	Ps sensor error	I/F
F24	F24	—	☼	☼	○	ALT	Pd sensor error	I/F
F29	—	—	☼	☼	●	SIM	Indoor unit other error	Indoor unit
F31	F31	—	☼	☼	○	SIM	Indoor unit EEPROM error	I/F

Check code			Wireless remote controller				Check code name	Judging device
Wired remote controller display	Outdoor unit 7-segment display		Sensor block display of receiving unit					
		Auxiliary code	Operation	Timer	Ready	Flash		
H01	H01	01: Comp. 1 side 02: Comp. 2 side 03: Comp. 3 side	●	☼	●		Compressor break down	IPDU
H02	H02	01: Comp. 1 side 02: Comp. 2 side 03: Comp. 3 side	●	☼	●		Compressor trouble (lock)	IPDU
H03	H03	01: Comp. 1 side 02: Comp. 2 side 03: Comp. 3 side	●	☼	●		Current detect circuit system error	IPDU
H04	H04	—	●	☼	●		Comp. 1 case thermo operation	I/F
H05	H05	—	●	☼	●		TD1 sensor miswiring	I/F
H06	H06	—	●	☼	●		Low pressure protective operation	I/F
H07	H07	—	●	☼	●		Oil level down detective protection	I/F
H08	H08	01: TK1 sensor error 02: TK2 sensor error 03: TK3 sensor error 04: TK4 sensor error 05: TK5 sensor error	●	☼	●		Oil level detective temp sensor error	I/F
H14	H14	—	●	☼	●		Comp. 2 case thermo operation	I/F
H15	H15	—	●	☼	●		TD2 sensor miswiring	I/F
H16	H16	01: TK1 oil circuit system error 02: TK2 oil circuit system error 03: TK3 oil circuit system error 04: TK4 oil circuit system error 05: TK5 oil circuit system error	●	☼	●		Oil level detective circuit error	I/F
H25	H25	—	●	☼	●		TD3 sensor miswiring	I/F
L03	—	—	☼	●	☼	SIM	Indoor unit center unit duplicated	Indoor unit
L04	L04	—	☼	○	☼	SIM	Outdoor unit line address duplicated	I/F
L05	—	—	☼	●	☼	SIM	Duplicated indoor units with priority (Displayed in indoor unit with priority)	I/F
L06	L06	No. of indoor units with priority	☼	●	☼	SIM	Duplicated indoor units with priority (Displayed in unit other than indoor unit with priority)	I/F
L07	—	—	☼	●	☼	SIM	Group line in individual indoor unit	Indoor unit
L08	L08	—	☼	●	☼	SIM	Indoor unit group/Address unset	Indoor unit, I/F
L09	—	—	☼	●	☼	SIM	Indoor unit capacity unset	Indoor unit
L10	L10	—	☼	○	☼	SIM	Outdoor unit capacity unset	I/F
L17	—	—	☼	○	☼	SIM	Outdoor unit type mismatch error	I/F

Check code			Wireless remote controller				Check code name	Judging device
Wired remote controller display	Outdoor unit 7-segment display		Sensor block display of receiving unit					
		Auxiliary code	Operation	Timer	Ready	Flash		
L20	—	—	◘	○	◘	SIM	Duplicated central control addresses	Indoor unit
L26	L26	Number of heat storage units connected	◘	○	◘	SIM	Too many heat storage units connected	I/F
L27	L27	Number of heat storage units connected	◘	○	◘	SIM	Error in number of heat storage units connected	I/F
L28	L28	—	◘	○	◘	SIM	Too many outdoor units connected	I/F
L29	L29	Number of IPDU (*1)	◘	○	◘	SIM	No. of IPDU error	I/F
L30	L30	Detected indoor unit address	◘	○	◘	SIM	Indoor unit outside interlock	Indoor unit
—	L31	—	—				Extended I/C error	I/F
P01	—	—	●	◘	◘	ALT	Indoor fan motor error	Indoor unit
P03	P03	—	◘	●	◘	ALT	Discharge temp. TD1 error	I/F
P04	P04	01: Comp. 1 side 02: Comp. 2 side 03: Comp. 3 side	◘	●	◘	ALT	High-pressure SW system operation	IPDU
P05	P05	00: 01: Comp. 1 side 02: Comp. 2 side 03: Comp. 3 side	◘	●	◘	ALT	Phase missing detection /Power failure detection Inverter DC voltage error (comp.) Inverter DC voltage error (comp.) Inverter DC voltage error (comp.)	I/F
P07	P07	01: Comp. 1 side 02: Comp. 2 side 03: Comp. 3 side	◘	●	◘	ALT	Heat sink overheat error	IPDU, I/F
P09	P09	Detected heat storage address	●	◘	◘	ALT	No heat storage unit water error	Heat storage unit
P10	P10	Detected indoor unit address	●	◘	◘	ALT	Indoor unit overflow error	Indoor unit
P12	—	—	●	◘	◘	ALT	Indoor unit fan motor error	Indoor unit
P13	P13	—	●	◘	◘	ALT	Outdoor liquid back detection error	I/F
P15	P15	01: TS condition 02: TD condition	◘	●	◘	ALT	Gas leak detection	I/F
P17	P17	—	◘	●	◘	ALT	Discharge temp. TD2 error	I/F
P18	P18	—	◘	●	◘	ALT	Discharge temp. TD3 error	I/F
P19	P19	Detected outdoor unit number	◘	●	◘	ALT	4-way valve inverse error	I/F
P20	P20	—	◘	●	◘	ALT	High-pressure protective operation	I/F
P22	P22	0*: IGBT circuit 1*: Position detective circuit error 3*: Motor lock error 4*: Motor current detection C*: TH sensor error D*: TH sensor error E*: Inverter DC voltage error (outdoor unit fan)	◘	●	◘	ALT	Outdoor unit fan IPDU error Note: Ignore 0 to F displayed in “*” position.	IPDU

Check code			Wireless remote controller				Check code name	Judging device
Wired remote controller display	Outdoor unit 7-segment display		Sensor block display of receiving unit					
		Auxiliary code	Operation	Timer	Ready	Flash		
P26	P26	01: Comp. 1 side 02: Comp. 2 side 03: Comp. 3 side	○	●	○	ALT	G-TR short protection error	IPDU
P29	P29	01: Comp. 1 side 02: Comp. 2 side 03: Comp. 3 side	○	●	○	ALT	Comp. position detective circuit system error	IPDU
P31	—	—	○	●	○	ALT	Other indoor unit error (Group follwer indoor unit error)	Indoor unit

*1 Number of IPDU

01: Comp. 1
02: Comp. 2
03: Comp. 1 + Comp. 2
04: Comp. 3
05: Comp. 1 + Comp. 3
06: Comp. 2 + Comp. 3
07: Comp. 1 + Comp. 2 + Comp. 3
08: Fan
09: Comp. 1 + Fan
0A: Comp. 2 + Fan
0B: Comp. 1 + Comp. 2 + Fan
0C: Comp. 3 + Fan
0D: Comp. 1 + Comp. 3 + Fan
0E: Comp. 2 + Comp. 3 + Fan
0F: Comp. 1 + Comp. 2 + Comp. 3 + Fan

Error detected by TCC-LINK central control device

Check code			Wireless remote controller				Check code name	Judging device
Central control device indication	Outdoor unit 7-segment display		Sensor block display of receiving unit					
		Auxiliary code	Operation	Timer	Ready	Flash		
C05	—	—	—				Sending error in TCC-LINK central control device	TCC-LINK
C06	—	—	—				Receiving error in TCC-LINK central control device	TCC-LINK
C12	—	—	—				Batch alarm of general-purpose equipment control interface	General-purpose equipment, I/F
P30	Differs according to error contents of unit with occurrence of alarm						Group control follower unit error	TCC-LINK
	—	—	(L20 is displayed.)				Duplicated central control addresses	

TCC-LINK : TOSHIBA Carrier Communication Link.

12 SPECIFICATIONS

Model	Sound pressure level (dBA)		Weight (kg)
	Cooling	Heating	Main unit (Ceiling panel)
MMU-AP0072WH1	*	*	19 (10)
MMU-AP0092WH1	*	*	19 (10)
MMU-AP0122WH1	*	*	19 (10)
MMU-AP0152WH1	*	*	19 (10)
MMU-AP0182WH1	*	*	26 (14)
MMU-AP0242WH1	*	*	26 (14)
MMU-AP0272WH1	*	*	26 (14)
MMU-AP0302WH1	*	*	26 (14)
MMU-AP0362WH1	*	*	36 (14)
MMU-AP0482WH1	*	*	36 (14)
MMU-AP0562WH1	*	*	36 (14)

* Under 70 dBA

Declaration of Conformity

Manufacturer: TOSHIBA CARRIER CORPORATION
336 Tadehara, Fuji-shi, Shizuoka-ken 416-8521 JAPAN

TCF holder: TOSHIBA CARRIER EUROPE S.A.S
Route de Thil
01120 Montluel FRANCE

Hereby declares that the machinery described below:

Generic Denomination: Air Conditioner

Model/type: MMU-AP0072WH1, MMU-AP0092WH1, MMU-AP0122WH1, MMU-AP0152WH1, MMU-AP0182WH1, MMU-AP0242WH1, MMU-AP0272WH1, MMU-AP0302WH1, MMU-AP0362WH1, MMU-AP0482WH1, MMU-AP0562WH1

Commercial name: Super Modular Multi System Air Conditioner
Super Heat Recovery Multi System Air Conditioner
Mini-Super Modular Multi System Air Conditioner (MiNi-SMMS series)

Complies with the provisions of the “Machinery” Directive (Directive 2006/42/EC) and the regulations transposing into national law

Note: This declaration becomes invalid if technical or operational modifications are introduced without the manufacturer’s consent.

WARNINGS ON REFRIGERANT LEAKAGE

Check of Concentration Limit

The room in which the air conditioner is to be installed requires a design that in the event of refrigerant gas leaking out, its concentration will not exceed a set limit.

The refrigerant R410A which is used in the air conditioner is safe, without the toxicity or combustibility of ammonia, and is not restricted by laws to be imposed which protect the ozone layer. However, since it contains more than air, it poses the risk of suffocation if its concentration should rise excessively. Suffocation from leakage of R410A is almost non-existent. With the recent increase in the number of high concentration buildings, however, the installation of multi air conditioner systems is on the increase because of the need for effective use of floor space, individual control, energy conservation by curtailing heat and carrying power etc.
Most importantly, the multi air conditioner system is able to replenish a large amount of refrigerant compared with conventional individual air conditioners. If a single unit of the multi conditioner system is to be installed in a small room, select a suitable model and installation procedure so that if the refrigerant accidentally leaks out, its concentration does not reach the limit (and in the event of an emergency, measures can be made before injury can occur).
In a room where the concentration may exceed the limit, create an opening with adjacent rooms, or install mechanical ventilation combined with a gas leak detection device.
The concentration is as given below.

$$\frac{\text{Total amount of refrigerant (kg)}}{\text{Min. volume of the indoor unit installed room (m}^3\text{)}} \leq \text{Concentration limit (kg/m}^3\text{)}$$

The concentration limit of R410A which is used in multi air conditioners is 0.3 kg/m^3.

▼NOTE 1

If there are 2 or more refrigerating systems in a single refrigerating device, the amounts of refrigerant should be as charged in each independent device.

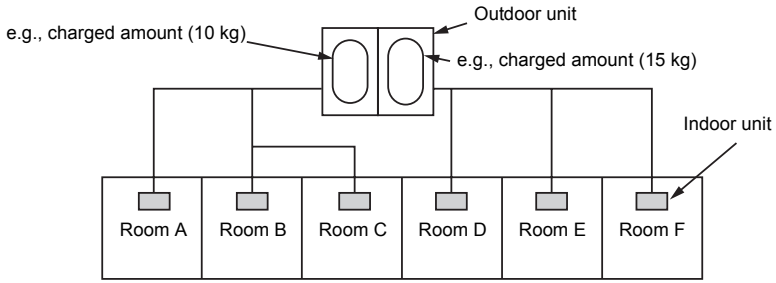

For the amount of charge in this example:
The possible amount of leaked refrigerant gas in rooms A, B and C is 10 kg.
The possible amount of leaked refrigerant gas in rooms D, E and F is 15 kg.

Important

▼NOTE 2

The standards for minimum room volume are as follows.

(1) No partition (shaded portion)

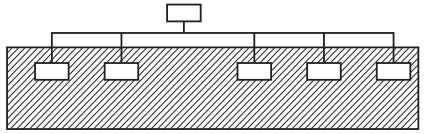

(2) When there is an effective opening with the adjacent room for ventilation of leaking refrigerant gas (opening without a door, or an opening 0.15% or larger than the respective floor spaces at the top or bottom of the door).

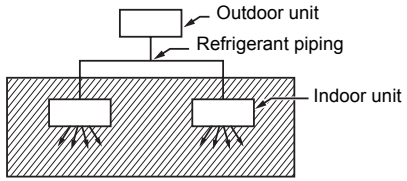

(3) If an indoor unit is installed in each partitioned room and the refrigerant piping is interconnected, the smallest room of course becomes the object. But when a mechanical ventilation is installed interlocked with a gas leakage detector in the smallest room where the density limit is exceeded, the volume of the next smallest room becomes the object.

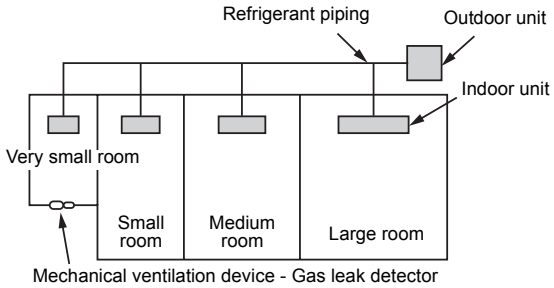

▼NOTE 3

The minimum indoor floor area compared with the amount of refrigerant is roughly as follows:
(When the ceiling is 2.7m high)

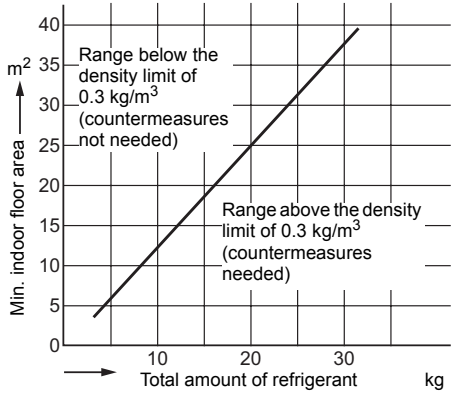

■ CONFIRMATION OF INDOOR UNIT SETUP

Prior to delivery to the customer, check the address and setup of the indoor unit, which has been installed in this time and fill the check sheet (Table below). Deta of four units can be entered in this check sheet. Copy this sheet according to the No. of the indoor units. If the installed system is a group control system, use this sheet by entering each line system into each installation manual attached to the other indoor units.

REQUIREMENT

This check sheet is required for maintenance after installation. Be sure to fill this sheet and then pass this Installation Manual to the customers.

Indoor unit setup check sheet

Indoor unit			**Indoor unit**			**Indoor unit**			**Indoor unit**		
Room name			**Room name**			**Room name**			**Room name**		
Model			**Model**			**Model**			**Model**		
Check indoor unit address. (For check method, refer to APPLICABLE CONTROLS in this manual.) * In case of a single system, it is unnecessary to enter the indoor address. (CODE NO.: Line [12], Indoor [13], Group [14], Central control [03])											
Line	**Indoor**	**Group**	**Line**	**Indoor**	**Group**	**Line**	**Indoor**	**Group**	**Line**	**Indoor**	**Group**
Central control address			**Central control address**			**Central control address**			**Central control address**		
Various setup			**Various setup**			**Various setup**			**Various setup**		
Have you changed high ceiling setup? If not, fill check mark [×] in [NO CHANGE], and fill check mark [×] in [ITEM] if changed, respectively. (For check method, refer to APPLICABLE CONTROLS in this manual.) * In case of replacement of short plugs on indoor microcomputer P.C. board, setup is automatically changed.											
High ceiling setup (CODE NO. [5d]) ☐ NO CHANGE ☐ STANDARD [0000] ☐ HIGH CEILING 1 [0001] ☐ HIGH CEILING 3 [0003]			High ceiling setup (CODE NO. [5d]) ☐ NO CHANGE ☐ STANDARD [0000] ☐ HIGH CEILING 1 [0001] ☐ HIGH CEILING 3 [0003]			High ceiling setup (CODE NO. [5d]) ☐ NO CHANGE ☐ STANDARD [0000] ☐ HIGH CEILING 1 [0001] ☐ HIGH CEILING 3 [0003]			High ceiling setup (CODE NO. [5d]) ☐ NO CHANGE ☐ STANDARD [0000] ☐ HIGH CEILING 1 [0001] ☐ HIGH CEILING 3 [0003]		
Have you changed lighting time of filter sign? If not, fill check mark [×] in [NO CHANGE], and fill check mark [×] in [ITEM] if changed, respectively. (For check method, refer to APPLICABLE CONTROLS in this manual.)											
Filter sign lighting time (CODE NO. [01]) ☐ NO CHANGE ☐ NONE [0000] ☐ 150H [0001] ☐ 2500H [0002] ☐ 5000H [0003] ☐ 10000H [0004]			Filter sign lighting time (CODE NO. [01]) ☐ NO CHANGE ☐ NONE [0000] ☐ 150H [0001] ☐ 2500H [0002] ☐ 5000H [0003] ☐ 10000H [0004]			Filter sign lighting time (CODE NO. [01]) ☐ NO CHANGE ☐ NONE [0000] ☐ 150H [0001] ☐ 2500H [0002] ☐ 5000H [0003] ☐ 10000H [0004]			Filter sign lighting time (CODE NO. [01]) ☐ NO CHANGE ☐ NONE [0000] ☐ 150H [0001] ☐ 2500H [0002] ☐ 5000H [0003] ☐ 10000H [0004]		
Have you changed detected temp. shift value? If not, fill check mark [×] in [NO CHANGE], and fill check mark [×] in [ITEM] if changed, respectively. (For check method, refer to APPLICABLE CONTROLS in this manual.)											
Detected temp. shift value setup (CODE NO. [06]) ☐ NO CHANGE ☐ NO SHIFT [0000] ☐ +1°C [0001] ☐ +2°C [0002] ☐ +3°C [0003] ☐ +4°C [0004] ☐ +5°C [0005] ☐ +6°C [0006]			Detected temp. shift value setup (CODE NO. [06]) ☐ NO CHANGE ☐ NO SHIFT [0000] ☐ +1°C [0001] ☐ +2°C [0002] ☐ +3°C [0003] ☐ +4°C [0004] ☐ +5°C [0005] ☐ +6°C [0006]			Detected temp. shift value setup (CODE NO. [06]) ☐ NO CHANGE ☐ NO SHIFT [0000] ☐ +1°C [0001] ☐ +2°C [0002] ☐ +3°C [0003] ☐ +4°C [0004] ☐ +5°C [0005] ☐ +6°C [0006]			Detected temp. shift value setup (CODE NO. [06]) ☐ NO CHANGE ☐ NO SHIFT [0000] ☐ +1°C [0001] ☐ +2°C [0002] ☐ +3°C [0003] ☐ +4°C [0004] ☐ +5°C [0005] ☐ +6°C [0006]		
Incorporation of parts sold separately			**Incorporation of parts sold separately**			**Incorporation of parts sold separately**			**Incorporation of parts sold separately**		
Have you incorporated the following parts sold separately? If incorporated, fill check mark [×] in each [ITEM]. (When incorporating, the setup change is necessary in some cases. For setup change method, refer to Installation Manual attached to each part sold separately.)											
Panel ☐ Standard panel			Panel ☐ Standard panel			Panel ☐ Standard panel			Panel ☐ Standard panel		
Filter ☐ Super long life filter			Filter ☐ Super long life filter			Filter ☐ Super long life filter			Filter ☐ Super long life filter		
☐ Others ( ) ☐ Others ( )			☐ Others ( ) ☐ Others ( )			☐ Others ( ) ☐ Others ( )			☐ Others ( ) ☐ Others ( )		

TOSHIBA CARRIER CORPORATION
336 Tadehara, Fuji-shi, Shizuoka-ken 416-8521 JAPAN

DH91303402